Structural Design Details

Of

The Proposed Construction of Multi Dwelling Residential Apartment Building (Block- A)
After Demolishing The Existing old Building at Door No: 1 to 46, T.S.No: 111 to 123, Ward- AD, Block No: 7, Sangiliandapuram Main Road, Ariyamangalam Zone, Tiruchirappalli City Corporation, Tiruchirappalli.

Structural Details Design by

Gstruds

Structural Engineering Consultancy Center

No. 64, Nandavanam Street,
LIC Colony
Trichy – 620021
Phone – 0431-4024691

STRUCTURAL DESIGN STABILITY CERTIFICATE.

I hereby certify that the proposed construction of Multi Dwelling Residential Apartment Building (Block- A) After Demolishing The Existing Old Building at Door No: 1 to 46, T.S.No: 111 to 123, Ward- AD, Block No: 7, Sangiliandapuram Main Road, Ariyamangalam Zone, Tiruchirappalli City Corporation, Tiruchirappalli. The building will withstand against the Earthquake,(Seismic Zone II as per IS 1893 (Part I) 2002) loading stress parameters are within limits of National Building Code and Bureau of Indian standards code of practice for concrete and loading. The building consists of stilt + four floors, Lift & Staircase Head room. For external and internal partition walls 200/100 thick A. A. C block work walls are used.

The R.C.C building frame of the structure is designed as per the Indian Standard code of practice for concrete and loading as follows:

1. IS: 456-2000 Code of Practice for Plain and Reinforced concrete

2. IS: 875-1987 Code of Practice for Design loads for Buildings and structures

3. IS: 1893-2002 Criteria for Earthquakes resistant design of structures Part-1 General Provisions and Buildings

4. IS: 4326-1993 Code of Practice for Earthquakes resistant design & Construction of Buildings.

5 .IS:13920-1993 Code of Practice for Ductile detailing of concrete structures subjected to seismic forces and

6. National Building code of India-2005.

It is further certified that the above structure will be constructed from foundation to roof, as per structural designs and detailing of reinforcements furnished in our drawings. The building will be safe and Sound as per the design.

R. GANESAN M.E., (Structres)
Structural Consultant
GSTRUDS
Structural Engineering
Consultancy Centre
No:64, Nandavanam Street,
Indra Nagar, L.I.C Colony,
Trichy - 620 021. Ph: 0431-4024691
Email: ganesan _ struct@ rediffmail.com
LPA REG NO: SE/Gr/TLPA/MAY2019/029

DESIGN BASIS REPORT
For

The proposed construction of Multi Dwelling Residential Apartment Building (Block- A) After Demolishing The Existing Old Building at Door No: 1 to 46, T.S.No: 111 to 123, Ward- AD, Block No: 7, Sangiliandapuram Main Road, Ariyamangalam Zone, Tiruchirappalli City Corporation, Tiruchirappalli.

TABLE OF CONTENTS

1.0 OBJECTIVE

2.0 DESIGN OF LOADS

2.1 Dead Loads

2.2 Imposed Loads

2.3 Earthquake Loads

2.4 Load Combinations

3.0 ANALYSIS METHOD

4.0 **DESIGN ASSUMPTION**

5.0 FOUNDATION DESIGN

6.0 MATERIALS

7.0 NOMINAL COVER TO REINFORCEMENT

1.0 OBJECTIVE

The proposed construction of Multi Dwelling Residential Apartment Building (Block- A) After Demolishing The Existing Old Building at Door No: 1 to 46, T.S.No: 111 to 123, Ward- AD, Block No: 7, Sangiliandapuram Main Road, Ariyamangalam Zone, Tiruchirappalli City Corporation, Tiruchirappalli.

The Building is designed for Stilt + 4 floors, Lift & Staircase Head Room. The structure is supported on column in turn resting on column footing Foundation. The Structural System comprises columns, beams, slabs and wall structure.

3-D Analysis of all the building structures will be carried out using STAAD PRO Software package and analysis results shall be used for designing the various elements.

2.0 DESIGN LOADS

2.1 Dead Loads

The Dead loads that are envisaged to act permanently are considered as per **IS: 875 (Part 1) – 1987 – Dead loads.** Indian standard **" Code of Practice for Design Loads (other than earthquakes) for Buildings and Structures".**

1. Slab is assumed to be 150mm & 125mm thick – 3.75 KN/m^2&3.125KN/m^2
2. Floor finish – 1.5KN/m^2
3. AAC Block masonry walls 200mm & 100mm thick are proposed to be used (location of walls per Architectural drawings) Unit weight is taken as 8 KN/m^3
4. Weathering course with tile finishing in Terrace average thick 100 mm finish –3KN/m^2

2.2 Imposed Loads

The imposed loads that are envisaged to get permanently are considered as per **IS: 875 (part – 2) – 1987.** Indian standard **"Code of Practice for Design loads (other than earthquake) for Buildings and structures".**

1. Living = 2 KN/m^2
2. Staircase = 4 KN/m^2
3. Toilets = 2 KN/m^2
4. Terrace floors = 1.5 KN/m^2

R.T.O

2.3 Earthquake Load

The loading due to earthquake is assessed based on the provisions of **IS: 1893-2016.** Structures with ductile detailing are considered as per **IS: 13920-2016.**

Madurai falls under Seismic Zone II

Zone factor **= 0.10**

Response reduction factor **= 5**

Importance factor **= 1.0**

Structure with ductile detailing is considered as per IS: 13920-2016

2.3 Load combinations

The various loads shall be combined in accordance with the stipulations in IS: 875 (Part 5) – 1987. Whichever combinations produced the most unfavorable effect in the building, foundation or structural member concerned shall be adopted. The various load combinations considered in the analysis are as follows:

1. 1(DL + LL)
2. 1(DL + 0.8LL + 0.8 SQX + 1
3. 1(DL + 0.8LL + 0.8 SQX - 1
4. 1(DL + 0.8LL + 0.8 SQZ + 1
5. 1(DL + 0.8LL + 0.8 SQZ - 1
6. 1.0(DL + SQX + 1)
7. 1.0(DL + SQX - 1)
8. 1.0(DL + SQZ + 1)
9. 1.0(DL + SQZ - 1)
10. 1.5(DL + LL)
11. 1.5(DL + SQX + 1)
12. 1.5(DL + SQX - 1)
13. 1.5(DL + SQZ + 1)
14. 1.5(DL + SQZ – 1)
15. 1.2(DL + LL + SQX + 1)

P.T.O

16. 1.2(DL + LL + SQX – 1)
17. 1.2(DL + LL + SQZ + 1)
18. 1.2(DL + LL + SQZ – 1)
19. 0.9DL + 1.5SQX + 1
20. 0.9DL + 1.5SQX – 1
21. 0.9DL + 1.5SQZ + 1
22. 0.9DL + 1.5SQZ - 1

The above load combination will be considered and effect of worst combinations will be taken for design of various building elements.

3.0 ANALYSIS METHODS

The analysis of the structures is carried out using the STAAD PRO. The entire super structure is modeled using frame elements as appropriate. Beams and columns are modeled as frame elements. Appropriate loads and its combinations as per relevant IS code clauses, for most unfavorable effects are chosen for design. Various load cases considered in the analysis are briefed above.

4.0 DESIGN ASSUMPTION

4.1.1 The Base of the Foundation is assumed to be FIXED & PINNED.

4.1.2 All concrete elements shall be designed in accordance with IS 456:2000 Limit state design.

4.1.3 Appropriate loads and its combination as per relevant clauses, for the most unfavorable effects are chosen for design. (Refer Load Combination below).

5.0 FOUNDATION DESIGN

Type of foundation : Column footing foundation (isolated & raft)
Depth of foundation : 3.05 m below natural ground level

6.0 MATERIALS

The self-weight of the various elements are computed based on the unit weight of materials as given below:

S. no	Materials	Unit weight KN / m^3
1	Reinforced Cement Concrete	25
2	AAC Block / Brick WORK	8/20
3	Steel	78.50

Structural concrete shall be of grade M25 for all R.C.C work.
Steel reinforcement shall be of grade Fe 500 confirming to IS: 1786-2008.

P.T.O

7.0 NOMINAL COVER TO REINFORCEMENT

From Durability requirement, exposure condition is assumed as mild for structural elements above ground level and moderate for structural elements below ground level.

The clear cover to reinforcement to meet durability requirement shall be as follows:

Footing - 50mm

Column - 40mm

Beam - 32mm

Slab - 20mm

R. GANESAN M.E., (Structres)
Structural Consultant
GSTRUDS
Structural Engineering
Consultancy Centre
No:64, Nandavanam Street,
Indra Nagar, L.I.C Colony,
Trichy - 620 021. Ph: 0431-4024691
Email: ganesan _ struct@ rediffmail.com
LPA REG NO: SE/Gr/TLPA/MAY2019/029

Column & Grid Layout

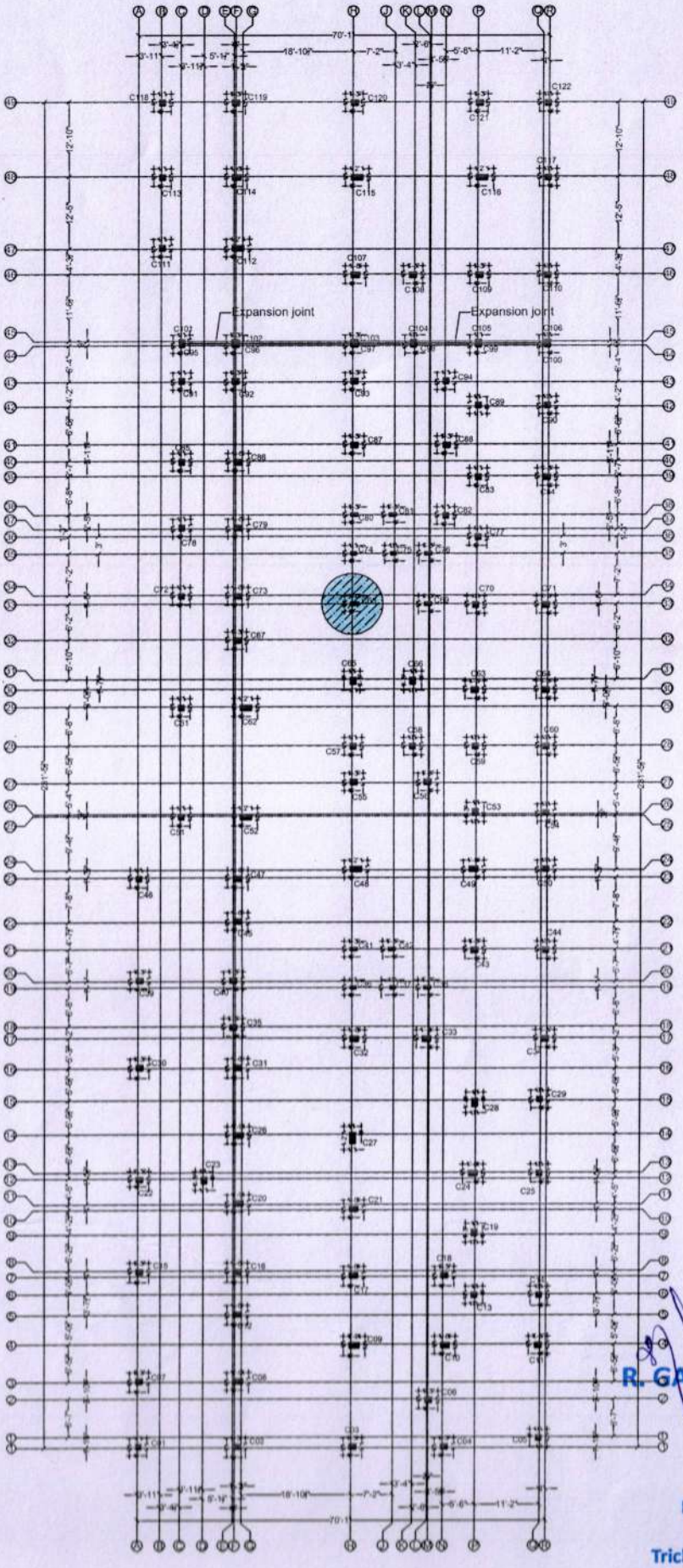

R. GANESAN M.E., (Structres)
Structural Consultant
GSTRUDS
Structural Engineering
Consultancy Centre
No:64, Nandavanam Street,
Indra Nagar, L.I.C Colony,
Trichy - 620 021. Ph: 0431-4024691
Email: ganesan _ struct@ rediffmail.com
LPA REG NO: SE/Gr/TLPA/MAY2019/029

Important Note : Design details for column C68 separately enclosed.

Foundation Layout

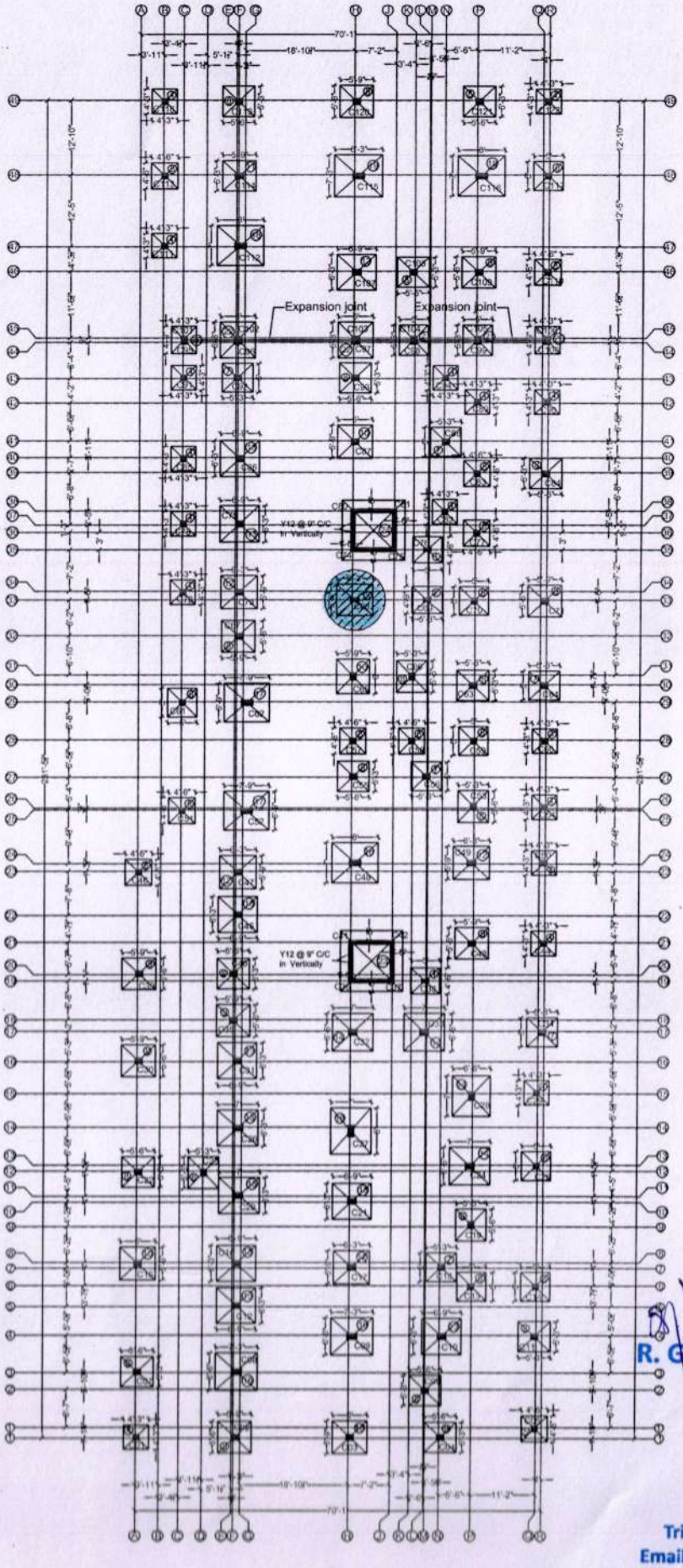

R. GANESAN M.E., (Structres)
Structural Consultant
GSTRUDS
Structural Engineering
Consultancy Centre
No:64, Nandavanam Street,
Indra Nagar, L.I.C Colony,
Trichy - 620 021. Ph: 0431-4024691
Email: ganesan _ struct@ rediffmail.com
LPA REG NO: SE/Gr/TLPA/MAY2019/029

Important Note : Design details for column footing C68 separately enclosed.

Stilt Floor Roof Beam Layout

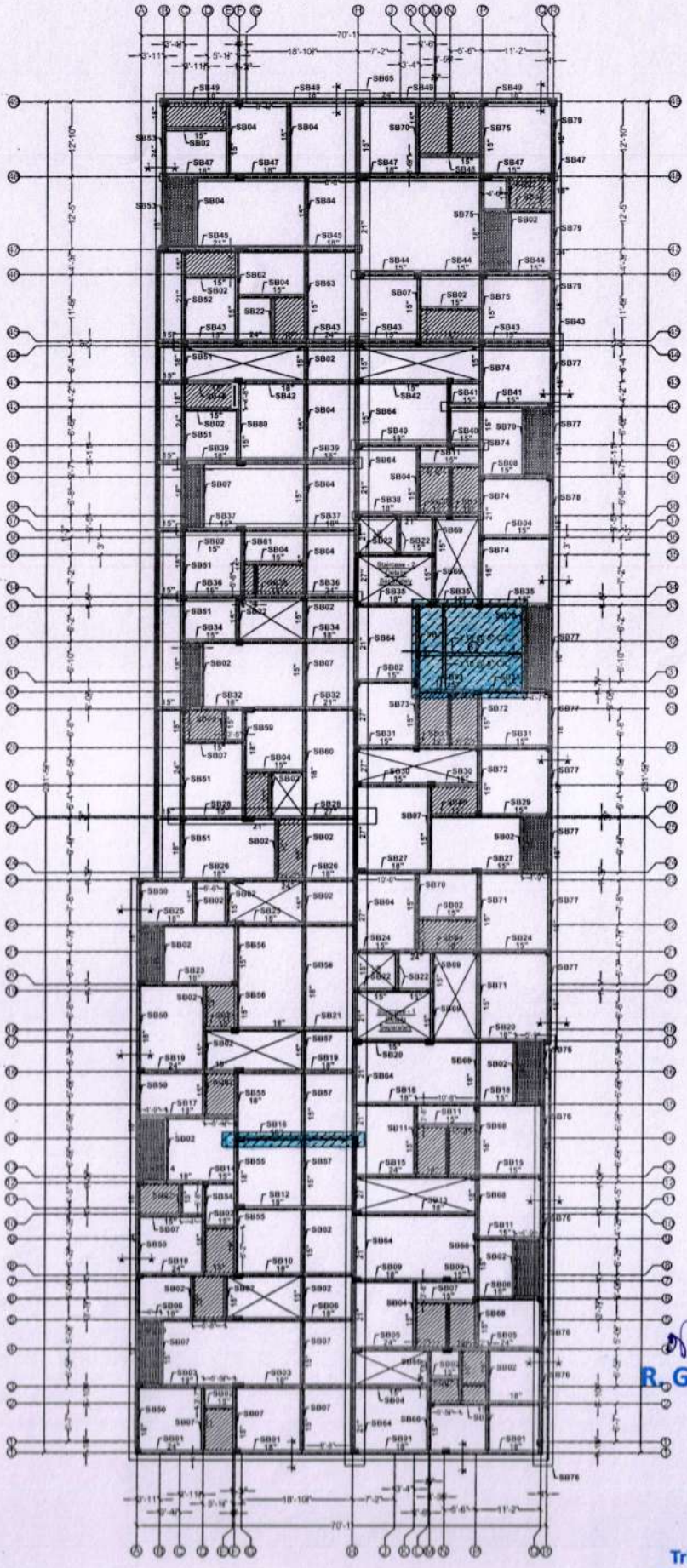

R. GANESAN M.E., (Structres)
Structural Consultant
GSTRUDS
Structural Engineering
Consultancy Centre
No:64, Nandavanam Street,
Indra Nagar, L.I.C Colony,
Trichy - 620 021. Ph: 0431-4024691
Email: ganesan _ struct@rediffmail.com
LPA REG NO: SE/Gr/TLPA/MAY2019/029

Important Note : Design details for beam SB16 & Slab S7 separately enclosed.

Design of Isolated Footing with Moment

The values are Displayed in Blue color are the Input values

Support No = **COLUMN NO C68**

1 Design Forces From STAAD Load Case = 10

1. Axial Load on column	=	756 KN
2. Bending moment along x-x, Mx	=	0 KN.m
3. Bending moment along y-y, My	=	0 KN.m

2 Design Datas

3. Compressive strength of Concrete, Fck	=	25 N/mm^2
4. Yield Strength of steel, Fy	=	500 N/mm^2
5.Diameter of Reinforcement, (x-direction)	=	10 mm
6.Diameter of Reinforcement, (y-direction)	=	10 mm
7. Clear cover to the reinforcement, C	=	50 mm
8. Safe bearing capacity of soil, SBC	=	280 KN/m^2
7 Type of Footing	=	Rectangular
8 Size of pedastal/Column	=	b x d
	=	0.23 x 0.45 m

2 Assume trial size of footing

Area of footing		=	Total Load/SBC
Self Wt. of footing			
(Assume 10% of column load		=	75.6 KN
Soil weight		=	0 KN
Total Load		=	831.6 KN
Area of footing required		=	831.6 / 280
		=	2.97 m^2
Size Required	B	=	1.4 m
	L	=	2.1 m
Size Provided	B	=	1.68 m
	L	=	1.91 m
Area of Footing Provided		=	**3.2088** m^2
			3.2088 > 2.97
			O.K

P.T.O

3 **Section Geometry**

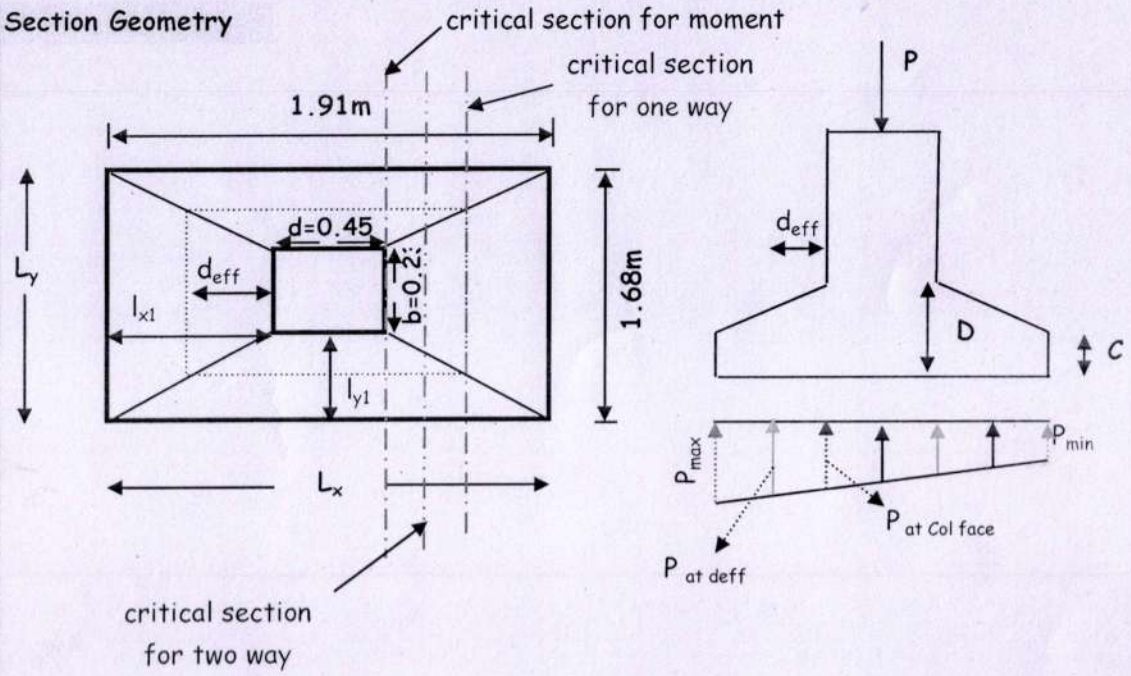

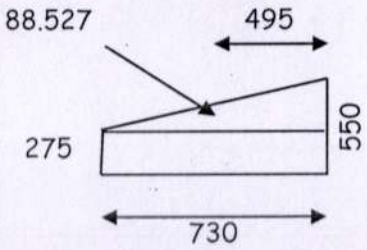

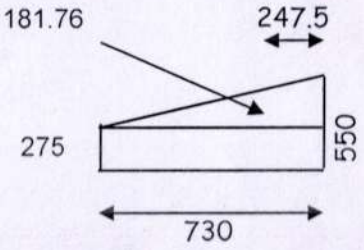

l_{x1} = $(L_x - d)/2$
= $(1.91 - 0.45)/2$
= **0.73** m

l_{y1} = $(L_y - d)/2$
= $(1.68 - 0.23)/2$
= **0.725** m

Assume Overall depth of footing, D	=	550 mm
Depth at free end, C	=	275 mm
d_{eff} at critical moment section	=	495 mm
d_{eff} at critical one way shear section	=	308.53 mm
d_{eff} at critical two way shear section	=	401.76 mm

4 **Check for Soil Pressure**

A) Along X direction

P.T.O

Eccentricity, e_{xx} = (M_{xx}/P)

= 0 / 831.6

= 0 m

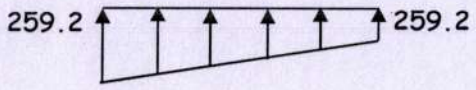

$L_x/6$ = 0.318 m

0.318>0

$e_{xx} < L_x/6$

Maximum Pressure, Pmax = $P/A(1+6e/B)$

= 831.6/3.2088(1 + 6 x (0+0/1.91)

= **259.2** KN/m^2

259.2<280

Safe

Minimum Pressure, Pmin = $P/A(1-6e/B)$

= 831.6/3.2088(1 - 6 x (0+0)/1.68)

= **259.2** KN/m^2

= 259.2<280

Safe

B) Along Y direction

Eccentricity, e_{yy} = (M_{yy}/P)

= 0 / 831.6

= 0 m

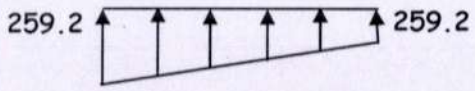

$L_x/6$ = 0.28 m

0.28>0

$e_{xx} < L_y/6$

Maximum Pressure, Pmax = $(P/A(1+6e/B)$

= 831.6/3.2088(1 + 6 x (0+0)/1.91)

= **259.2** KN/m^2

259.2<280

Safe

Minimum Pressure, Pmin = $P/A(1-6e/B)$

= 831.6/3.2088(1 - 6 x (0+0)/1.68)

= **259.2** KN/m^2

= 259.2<280

Safe

5 Bending moment calculations

P.T.O

S.No	Direction	Pmax(net)	Pmin(net)	P at face of the column	Moment, KN/m
1	x	235.64	235.64	235.64	94.185
2	y	235.64	235.64	235.64	92.895

6 **Check for depth (Moment consideratin)**

$Mu.lim = (0.36 \times Fck \times (xu.max/d) \times (1-0.42(xu.max/d)) \times bd^2$

$xu.max/d = 0.46$

$Mu.lim = 3.34\ bd^2$

$d,reqd = (Mu.lim/Qb)^{1/2}$

$= (94185000/(3.34 \times 1000))^{1/2}$

$= 167.93$ mm

$167.93 < 495$

O.K

7 **Calculation of Reinforcement**

S. N	Direction	Mu/bd^2	pt from SP16	pt, min	pt,provided	Ast, mm^2
1	x	0.38	0.089	0.12	0.120	594
2	y	0.38	0.089	0.12	0.120	594

$pt = 100Ast/bd$

$Ast = (pt/100)xbd$

8 **Spacing of reinforcement**

Spacing, mm		Spacing	Ast provided,
Reqd	Minimum	provided, mm	mm^2
132	300	120	654.17
132	300	125	628

pt.max, Provided = 0.1322 %

Spacing = (ast x 1000)/Ast

where,
ast= C/s area of bar
Ast=Area of reinforcement provided

9 **Check for one way shear**

S.No	Direction	Pmax(net)	Pmin(net)	P at critical 1way shear Xn	Shear, KN
1	x	235.64	235.64	235.64	83.07
2	y	235.64	235.64	235.64	81.3

Nominal Shear stress, tv = Vu/bd

P.T.O

		=	83070/1000 x 308.53
		=	0.27 N/mm^2
	pt.max, Provided	=	0.1322 %
	Allowable shear stress, tc (for pt,max)	=	0.2747 N/mm^2
			tv < tc
			O.K
10	**Check for two way Shear**		
	Punching Shear,Vu	=	Net upward pressure x (A_F - A_c)
		=	1097.43 KN
	Punching Shear stress,	=	Vu/perimeter at critical section*d_{eff}
		=	0.8178 N/mm^2
	Allowable Stress	=	0.25(fck)$^{1/2}$
		=	1.25 N/mm^2
			O.K
11	**Check for bearing stress**		
	Actual bearing stress,	=	1134 KN
	Limiting bearing stress @ Column - footing		
	interface, fbr,max	=	0.45 fck (A1/A2)$^{1/2}$
	A1	=	279500 mm^2
	(A1/A2)$^{1/2}$	=	1
	fbr,max	=	11.25 N/mm^2
	Limiting bearing stress @ Column - footing		
	interface, fbr,max	=	0.45 fck (A1/A2)$^{1/2}$
	A1	=	3208800 mm^2
	A2	=	279500 mm^2
	(A1/A2)$^{1/2}$	=	2
	fbr,max	=	22.5 N/mm^2
	Limiting Bearing resistance, Fbr	=	3144.4 KN
			3144.375>1134
		=	O.K
	0	=	0
	0	=	0
	0	=	0 Ø
11	**Reinforcement Details**		

P.T.O

Direction	Reinforcement
X	Y10 @120mm c/c
Y	Y10 @125mm c/c

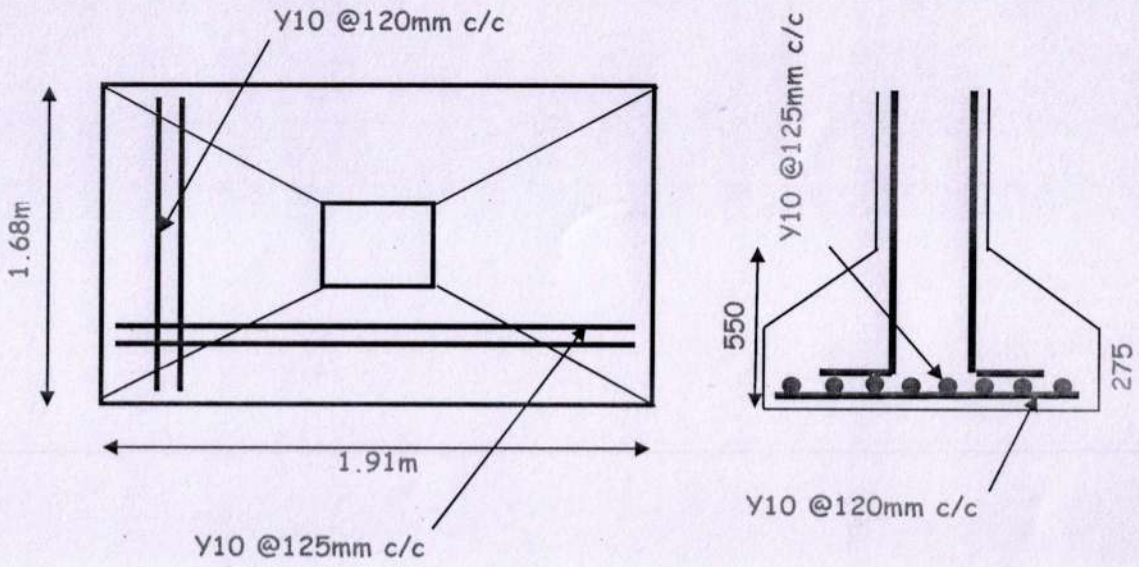

R. GANESAN M.E., (Structres)
Structural Consultant
GSTRUDS
Structural Engineering
Consultancy Centre
No:64, Nandavanam Street,
Indra Nagar, L.I.C Colony,
Trichy - 620 021. Ph: 0431-4024691
Email: ganesan _ struct@ rediffmail.com
LPA REG NO: SE/Gr/TLPA/MAY2019/029

Design of column with Biaxial Moment

Column No = **C68 (Upto Stilt Floor Roof)**

1 Design Forces From STAAD Load Case = C10

1. Axial Load on column	=	1500	KN
2. Bending moment along x-x, Mux	=	45	KN.m
3. Bending moment along y-y, Muy	=	0.01	KN.m

2 Design Datas

1. Compressive strength of Concrete, Fck	=	25	N/mm^2
2. Yield Strength of steel, Fy	=	500	N/mm^2
3.Diameter of Longitudinal Reinforcement,	=	20	mm
4.Diameter of lateral Reinforcement,	=	8	mm
5. Clear cover to the reinforcement, C	=	32	mm
6. Type of column	=	Rectangular	
7. Size of Column	=	b x d	
	=	230 x 450	mm
8. Unsupported Length of Column along x-x,L_x	=	3	m
9. Unsupported Length of Column along y-y,Ly	=	3	m
10. Effective length factor,	=	1	
11. Effective Length of Column, along x-x, L_x	=	3	m
12. Effective Length of Column, along y-y, Ly	=	3	m

2 Check for leff/D

Effective length,lex/Lateral dimensions = L_{ex} / D
= 13.04
= 13.04>12
= Long Column

As per clause 25.1.2.2, IS:456:2000

Effective length,ley/Lateral dimensions = L_{ex} / b
= 6.67
= 6.67< 12
= Short Column

3 Section Geometry

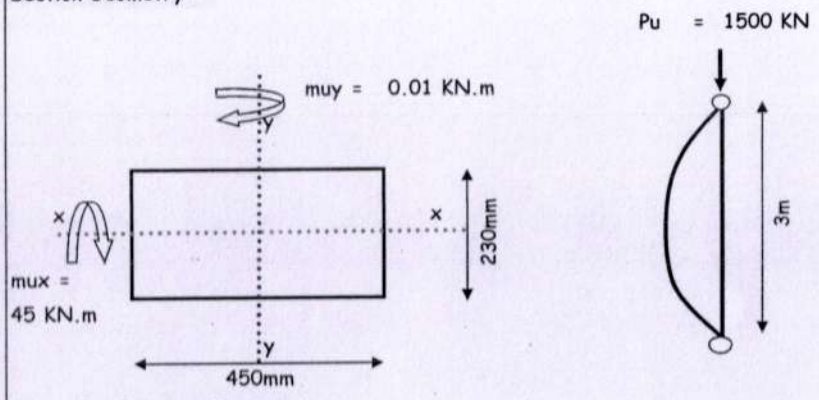

4 Check for Minimum Eccentricity

As per Clause 25.4, IS:456:2000

Applied eccentricties

ex	=	Mux/Pu	
	=	45/1500	
	=	30	mm
ey	=	Muy/Pu	
	=	0.01/1500	
	=	0.0067	mm

P.T. 01

Minimum eccenticity

e_{xx} = (lex/500)+(D/30)
= (3000/500) + (450/30)
= 21 mm or 20 mm
= 21 mm

e_{yy} = (ley/500)+(D/30)
= (3000/500) + (230/30)
= 13.667 mm or 20 mm
= 20 mm

5 Moment due to Eccentricity

m_{uex} = Pu x e_{xx}
= (1500x21)/1000
= 31.5 KN.m

m_{uey} = Pu x e_{yy}
= (1500x13.67)/1000
= 20.5 KN.m

6 Design Moment

mux = Mux or muex
= 45 KN.m

muy = Mux or muey
= 20.5 KN.m

7 Calculation of Longitudinal reinforcement

Assume percentage of reinforcement = 2.4 %
Asc, required = 2.4/100x 230x450
= 2484 mm^2
No of bars = 8 Nos
Asc, Provided = 2512 mm^2
pt, provided = 2.427 %

Moment Capacity Along x Direction

(Pu/fck b D) = (1500000/25 x 230 x 450)
= 0.58
p/fck = 2.427/25
= 0.1

d'/D = 32/450
= 0.07

P.T.O

From interaction chart, SP16

$Mux1/fck\ b\ D^2$ = 0.12

Mux1 = 0.12 x 230x230x450x25

= 139.73 KN.m

Moment Capacity Along y Direction

(Pu/fck b D) = (1500000/25 x 230 x 450)

= 0.58

p/fck = 2.427/25

= 0.0971

b'/D = 32/230

= 0.14

From interaction chart, SP16

$Muy1/fck\ b\ D^2$ = 0.1

Muy1 = 0.1 x 230x230x450x25

= 116.44 KN.m

8 **Check for Moment Capcity**

$(Mux/Mux1)^{an} + (Muy/Muy1)^{an} < 1$

Puz = (0.45 fck.Ac) +(0.75 fy -0.45fck)Asc

Ac = 103500 mm^2

Puz = 2078.115 KN

Pu/Puz = 0.722

an = 1.87

For Pu/Puz =0.2 to 0.8
an varies from 1.0 to 2.0

$(Mux/Mux1)^{an} + (Muy/Muy1)^{an}$ = 0.159

0.159< 1

O.K

9 **Calculation of Lateral Reinforcement**

Spacing of ties

1. Least Lateral Dimensions of column = 230 mm
2. Sixteen times the least dia of Longi bar = 320 mm
3. 300mm = 300 mm

Adopt Spacing = 200 mm

10 **Details**

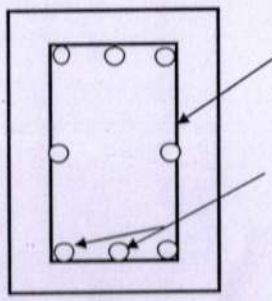

No of bars = 8 Nos

R. GANESAN M.E., (Structres)
Structural Consultant
GSTRUDS
Structural Engineering
Consultancy Centre
No:64, Nandavanam Street,
Indra Nagar, L.I.C Colony,
Trichy - 620 021. Ph: 0431-4024691
Email: ganesan _ struct@ rediffmail.com
LPA REG NO: SE/Gr/TLPA/MAY2019/029

Design of column with Biaxial Moment

Column No = **C68 (From Stilt Floor Roof to Second**

1 Design Forces From STAAD Load Case = C10

1. Axial Load on column	=	1111	KN
2. Bending moment along x-x, Mux	=	10.54	KN.m
3. Bending moment along y-y, Muy	=	0.65	KN.m

2 Design Datas

1. Compressive strength of Concrete, Fck	=	25	N/mm^2
2. Yield Strength of steel, Fy	=	500	N/mm^2
3.Diameter of Longitudinal Reinforcement,	=	20	mm
4.Diameter of lateral Reinforcement,	=	8	mm
5. Clear cover to the reinforcement, C	=	32	mm
6. Type of column	=	Rectangular	
7. Size of Column	=	b x d	
	=	230 x 450	mm
8. Unsupported Length of Column along x-x,L_x	=	3	m
9. Unsupported Length of Column along y-y,Ly	=	3	m
10. Effective length factor,	=	1	
11. Effective Length of Column, along x-x, L_x	=	3	m
12. Effective Length of Column, along y-y, Ly	=	3	m

2 Check for leff/D

Effective length,lex/Lateral dimensions = L_{ex} / D
= 13.04
= 13.04>12
= Long Column

As per clause 25.1.2.2, IS:456:2000

Effective length,ley/Lateral dimensions = L_{ex} / b
= 6.67
= 6.67< 12
= Short Column

3 Section Geometry

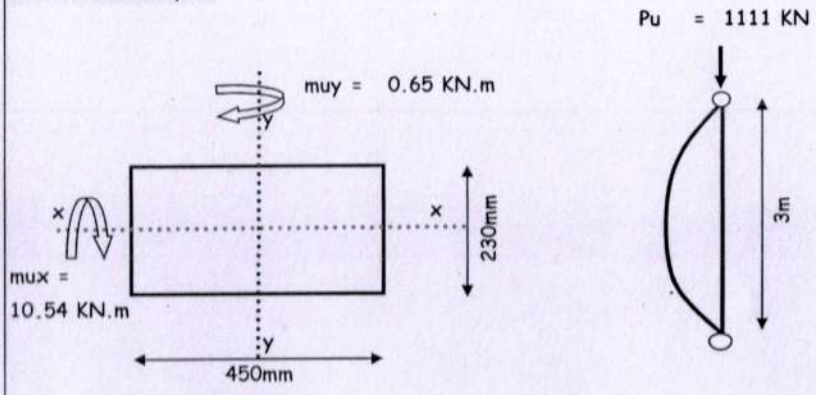

4 Check for Minimum Eccentricity

As per Clause 25.4, IS:456:2000

Applied eccentricties

ex	=	Mux/Pu	
	=	10.54/1111	
	=	9.4869	mm
ey	=	Muy/Pu	
	=	0.65/1111	
	=	0.5851	mm

P.T.O

Minimum eccenticity

e_{xx} = (lex/500)+(D/30)
= (3000/500) + (450/30)
= 21 mm or 20 mm
= 21 mm

e_{yy} = (ley/500)+(D/30)
= (3000/500) + (230/30)
= 13.667 mm or 20 mm
= 20 mm

5 **Moment due to Eccentricity**

m_{uex} = Pu x e_{xx}
= (1111x21)/1000
= 23.33 KN.m

m_{uey} = Pu x e_{yy}
= (1111x13.67)/1000
= 15.18 KN.m

6 **Design Moment**

mux = Mux or muex
= **23.33** KN.m

muy = Mux or muey
= **15.18** KN.m

7 **Calculation of Longitudinal reinforcement**

Assume percentage of reinforcement = 2.4 %
Asc, required = 2.4/100x 230x450
= 2484 mm^2
No of bars = 8 Nos
Asc, Provided = 2512 mm^2
pt, provided = 2.427 %

Moment Capacity Along x Direction
(Pu/fck b D) = (1111000/25 x 230 x 450)
= 0.43
p/fck = 2.427/25
= 0.1

d'/D = 32/450
= 0.07

P.T.O

From interaction chart, SP16

$Mux1/fck\ b\ D^2$ = 0.12

Mux1 = 0.12 x 230x230x450x25

= 139.73 KN.m

Moment Capacity Along y Direction

(Pu/fck b D) = (1111000/25 x 230 x 450)

= 0.43

p/fck = 2.427/25

= 0.0971

b'/D = 32/230

= 0.14

From interaction chart, SP16

$Muy1/fck\ b\ D^2$ = 0.12

Muy1 = 0.12 x 230x230x450x25

= 139.73 KN.m

8 **Check for Moment Capcity**

$(Mux/Mux1)^{an} + (Muy/Muy1)^{an} < 1$

Puz = (0.45 fck.Ac) +(0.75 fy -0.45fck)Asc

Ac = 103500 mm^2

Puz = 2078.115 KN

Pu/Puz = 0.535

an = 1.5583

For Pu/Puz =0.2 to 0.8
an varies from 1.0 to 2.0

$(Mux/Mux1)^{an} + (Muy/Muy1)^{an}$ = 0.093

0.093< 1

O.K

9 **Calculation of Lateral Reinforcement**

Spacing of ties

1. Least Lateral Dimensions of column = 230 mm
2. Sixteen times the least dia of Longi bar = 320 mm
3. 300mm = 300 mm

Adopt Spacing = 200 mm

10 **Details**

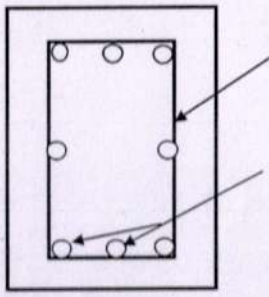

No of bars = 8 Nos

R. GANESAN M.E., (Structres)
Structural Consultant
GSTRUDS
Structural Engineering
Consultancy Centre
No:64, Nandavanam Street,
Indra Nagar, L.I.C Colony,
Trichy - 620 021. Ph: 0431-4024691
Email: ganesan _ struct@ rediffmail.com
LPA REG NO: SE/Gr/TLPA/MAY2019/029

Design of column with Biaxial Moment

Column No = **C68 (From Second Floor Roof to Ter**

1 Design Forces From STAAD Load Case = C10

1. Axial Load on column	=	680 KN
2. Bending moment along x-x, Mux	=	18.07 KN.m
3. Bending moment along y-y, Muy	=	14.11 KN.m

2 Design Datas

1. Compressive strength of Concrete, Fck	=	25 N/mm^2
2. Yield Strength of steel, Fy	=	500 N/mm^2
3.Diameter of Longitudinal Reinforcement,	=	20 mm
4.Diameter of lateral Reinforcement,	=	8 mm
5. Clear cover to the reinforcement, C	=	32 mm
6. Type of column	=	Rectangular
7. Size of Column	=	b x d
	=	200 x 450 mm
8. Unsupported Length of Column along x-x,L_x	=	3 m
9. Unsupported Length of Column along y-y,Ly	=	3 m
10. Effective length factor,	=	1
11. Effective Length of Column, along x-x, L_x	=	3 m
12. Effective Length of Column, along y-y, Ly	=	3 m

2 Check for leff/D

Effective length,lex/Lateral dimensions = L_{ex} / D
= 15
= 15>12
= Long Column

As per clause 25.1.2.2, IS:456:2000

Effective length,ley/Lateral dimensions = L_{ex} / b
= 6.67
= 6.67< 12
= Short Column

3 Section Geometry

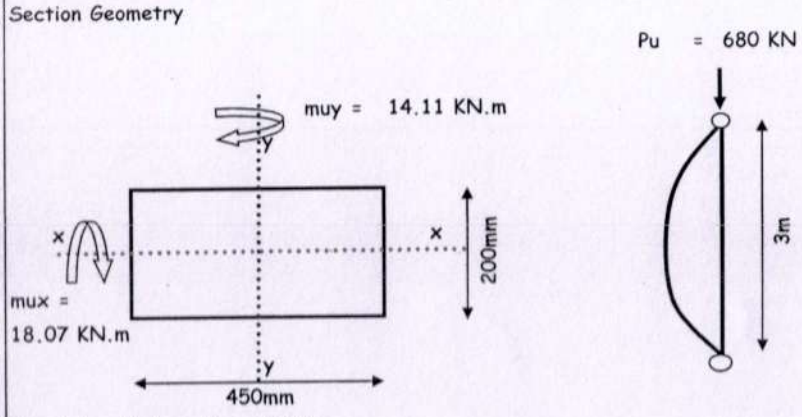

4 Check for Minimum Eccentricity

As per Clause 25.4, IS:456:2000

Applied eccentricties

ex	=	Mux/Pu
	=	18.07/680
	=	26.574 mm
ey	=	Muy/Pu
	=	14.11/680
	=	20.75 mm

P.T.O

Minimum eccenticity

e_{xx} = (lex/500)+(D/30)
= (3000/500) + (450/30)
= 21 mm or 20 mm
= 21 mm

e_{yy} = (ley/500)+(D/30)
= (3000/500) + (200/30)
= 12.667 mm or 20 mm
= 20 mm

5 **Moment due to Eccentricity**

m_{uex} = Pu x e_{xx}
= (680x21)/1000
= 14.28 KN.m

m_{uey} = Pu x e_{yy}
= (680x12.67)/1000
= 8.61 KN.m

6 **Design Moment**

mux = Mux or muex
= **18.07** KN.m

muy = Mux or muey
= **14.11** KN.m

7 **Calculation of Longitudinal reinforcement**

Assume percentage of reinforcement = 2.43 %
Asc, required = 2.43/100x 200x450
= 2187 mm^2
No of bars = 7 Nos
Asc, Provided = 2198 mm^2
pt, provided = 2.442 %

Moment Capacity Along x Direction

(Pu/fck b D) = (680000/25 x 200 x 450)
= 0.3
p/fck = 2.442/25
= 0.1

d'/D = 32/450
= 0.07

P.T.O

From interaction chart, SP16

$Mux1/fck\ b\ D^2$ = 0.16

Mux1 = 0.16 x 200x200x450x25

= 162 KN.m

Moment Capacity Along y Direction

(Pu/fck b D) = (680000/25 x 200 x 450)

= 0.3

p/fck = 2.442/25

= 0.0977

b'/D = 32/200

= 0.16

From interaction chart, SP16

$Muy1/fck\ b\ D^2$ = 0.15

Muy1 = 0.15 x 200x200x450x25

= 151.88 KN.m

8 **Check for Moment Capcity**

$(Mux/Mux1)^{an} + (Muy/Muy1)^{an} < 1$

Puz = (0.45 fck.Ac) +(0.75 fy -0.45fck)Asc

Ac = 90000 mm^2

Puz = 1812.0225 KN

Pu/Puz = 0.375

an = 1.2917

For Pu/Puz =0.2 to 0.8
an varies from 1.0 to 2.0

$(Mux/Mux1)^{an} + (Muy/Muy1)^{an}$ = 0.105

0.105< 1

O.K

9 **Calculation of Lateral Reinforcement**

Spacing of ties

1. Least Lateral Dimensions of column = 200 mm
2. Sixteen times the least dia of Longi bar = 320 mm
3. 300mm = 300 mm

Adopt Spacing = **200** mm

10 Details

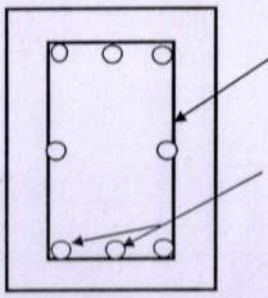

No of bars = 8 Nos

R. GANESAN M.E., (Structres)
Structural Consultant
GSTRUDS
Structural Engineering
Consultancy Centre
No:64, Nandavanam Street,
Indra Nagar, L.I.C Colony,
Trichy - 620 021. Ph: 0431-4024691
Email: ganesan _ struct@ rediffmail.com
LPA REG NO: SE/Gr/TLPA/MAY2019/029

Design of Beam SB16

Size of Beam	-200mm x 450mm
Concrete grade	- M25
Characteristic strength of reinforcement	- 500N/mm^2
Clear cover	- 32mm,
Effective depth = 450-32-20/2 = 408	- 408 mm
Dia of rod used	- 20mm

From staadd out put result

Factored Shear force maximum	- 108 kN
Factored Sagging moment Mu_z	- 83 knm
Factored Hogging moment Mu_z	- 145 knm

Reinforcement is at bottom:

$$M_u/bd^2 \text{ (sagging)} = = \frac{83 \times 10^6}{200 \times (408)^2} = 2.49 \text{ N/mm}^2$$

Using design aids, for M25, Fe 500, Table 3,

$P_t = 0.663\%$

$$A_t = \frac{0.663x200x408}{100} = 541\text{mm}^2$$

Provide 3Y16 = 603 mm^2 > 541 mm^2

Hence Safe

Y-T-O

Reinforcement at support section:

M_u/bd^2 (Hogging) = = $\frac{145 \times 10^6}{200x(408)^2}$ = 4.80 N/mm^2

Using design aids, for M25, Fe 500, Table 3,

P_t = 0.132% P_c= 0.409%

$A_t = \frac{0.132x200x408}{100}$ = 1077 mm^2

Provide

2Y20 + 2Y20 = 1252mm^2 > 1077 mm^2

Hence Safe.

Design for Shear:

T_v Max = $\frac{Vu}{bd} = \frac{108x1000}{200x408}$ = 1.32 N/mm^2

Ast provided, 1252 mm^2

$P_t = \frac{1252x100}{200x408}$ =1.53 %

Refer table, 61 of SP16, for M25 grade Concrete

T_c = 0.74 N/mm^2

So shear taken by stirrups ,

$\frac{(Tv-Tc)Xbd}{1000} = \frac{(1.32-0.74)X200X408}{1000}$ = 47.38KN

Shear force per CM depth of beam = $\frac{47.38}{40.80}$ = 1.16 KN/cm depth of beam

Refer table No. 62,

Provide 2 legged Y8 @200mm C/C

Size of beam (200 x 450)mm
Span reinforcement (Bottom) – 3Y16
Support reinforcement (Top) – 2Y20 + 2Y20
Stirrups – Y8 @ 200mm C/C

R. GANESAN M.E., (Structres)
Structural Consultant
GSTRUDS
Structural Engineering
Consultancy Centre
No:64, Nandavanam Street,
Indra Nagar, L.I.C Colony,
Trichy - 620 021. Ph: 0431-4024691
Email: ganesan _ struct@ rediffmail.com
LPA REG NO: SE/Gr/TLPA/MAY2019/029

Design of slab (S7)

Four Edges Discontinuous

Fck	25	N/mm^2
Fy	500	N/mm^2
Dia of bar (Lx Direction)	10	mm
Dia of bar (Ly Direction)	10	mm
Clear cover	15	mm
Clear span Lx	4450	mm
Clear span Ly	5560	mm
Width of Beam	200	mm
Slab tk	150	mm
Floor Finish	70	mm
Weathering Coarse	5	mm
LIVE LOAD	2	KN/m2
Length of slab (lx)	4580	mm
Length of slab (ly)	5685	mm
Dead Load	5.18	KN/m2
LIVE LOAD	2	KN/m2
FD D.L	7.77	KN/m2
FD L.L	3	KN/m2
ly/lx	1.2494	IT IS TWO WAY SLAB

Bending Moment Coeffecient for Rectangular Panels Supported on Four Sides with Provision for Torsion at Corners (IS 456-2000 Table 26)

		short span		long span	
		(-ve Mx)	(+ve Mx	(-ve My)	(+ve My)
		0	0.0774	0	0.056
support moment	Mx	0	KN.m		
	My	0	KN.m		
span moment	Mx	17.482	KN.m		
	My	12.651	KN.m		

Xu max/d	0.46	
Q	3.3402	
d rquired	72.346	The depth provide is suffcient
Effective depth shorter span	130	
Effective depth longer span	120	
Ast (+ ve Shorter span)	325.61	mm^2
Ast (+ ve Longerer span)	253.17	mm^2
Ast (- ve Shorter span)	0	mm^2
Ast (- ve Longerer span)	0	mm^2
Min Ast	180	mm^2

SPAN REINFORCEMENT

TO PROVIDE 10 mm DIA OF BAR @241 mm SPACING IN 4450 mm DIRECTION

TO PROVIDE 10 mm DIA OF BAR @300 mm SPACING IN 5560 mm DIRECTION

SUPPORT REINFORCEMENT

R. GANESAN M.E., (Structres)
Structural Consultant
GSTRUDS
Structural Engineering
Consultancy Centre
No:64, Nandavanam Street,
Indra Nagar, L.I.C Colony,
Trichy - 620 021. Ph: 0431-4024691
Email: ganesan _ struct@ rediffmail.com
LPA REG NO: SE/Gr/TLPA/MAY2019/029

DIRECTORATE OF TOWN AND COUNTRY PLANNING

(Government of Tamil Nadu)
(807 Anna Salai, Chennai 600 002)

TIRUCHIRAPPALLI LOCAL PLANNING AUTHORITY

(Kajamalai Main road, Kajamalai, Tiruchy 620 023)

PROFESSIONAL REGISTRATION CERTIFICATE

This is to certify that Thiru **R.GANESAN** has enrolled as **STRUCTURAL ENGINEER GRADE-I** with this office who has the qualification of **M.E., in Structural Engineering** and experience in the relevant field for 29 years.

He has been given the Registration No.SE/Gr.I/TLPA/May2019/029 on 08.05.2019.

He shall be required to comply with the duties and responsibilities prescribed by the Government of Tamil Nadu in Part V, "Registration of Professionals", Tamil Nadu Combined Development and Building Rules 2019, approved vide G.O (Ms) No.18 MAWS (MA1) Department dated 4.2.2019.

This Registration is valid up to 07.05.2024



திருச்சி உள்ளூர் திட்டக் குழுமம்
10 MAY 2019
திருச்சிராப்பள்ளி - 23

Member Secretary,
Tiruchirappalli Local Planning Authority,
Tiruchirappalli

8.5.19

Self Attested

R. GANESAN M.E., (Structres)
Structural Consultant
GSTRUDS
Structural Engineering
Consultancy Centre
No:64, Nandavanam Street,
Indra Nagar, L.I.C Colony,
Trichy - 620 021. Ph: 0431-4024691
Email: ganesan _ struct@ rediffmail.com
LPA REG NO: SE/Gr/TLPA/MAY2019/029