Structural Design Details

Of

The Proposed Construction of Residential Apartment
Building at Plot No: 4 & 5, T.S.No.: 87 & 88
(OLD S.F.No.: 176/1Pt.,)
Block No: 9, ward - I, Arul Nagar,
Pandamangalam Village,
K.Abishekapuram Zone, Trichy City Corporation.

Structural Details Design by

Gstruds

Structural Engineering Consultancy Center

No. 64, Nandavanam Street,
LIC Colony
Trichy – 620021
Phone – 0431-4024691

STRUCTURAL DESIGN STABILITY CERTIFICATE.

I hereby certify that the proposed construction of Residential Apartment Building at Plot No: 4 & 5, T.S.No: 87 & 88 (OLD S.F.No.: 176/1Pt.,) Block No: 9, ward - I, Arul Nagar, Pandamangalam Village, K.Abishekapuram Zone, Trichy City Corporation. The building will withstand against the Earthquake, (Seismic Zone II as per IS 1893 (Part I) 2002) loading stress parameters are within limits of National Building Code and Bureau of Indian standards code of practice for concrete and loading. The building consists of stilt + five floors. For external and internal partition walls 230/150/100 thick A. A. C block work walls are used.

The R.C.C building frame of the structure is designed as per the Indian Standard code of practice for concrete and loading as follows:

1. IS: 456-2000 Code of Practice for Plain and Reinforced concrete

2. IS: 875-1987 Code of Practice for Design loads for Buildings and structures

3. IS: 1893-2002 Criteria for Earthquakes resistant design of structures Part-1 General Provisions and Buildings

4. IS: 4326-1993 Code of Practice for Earthquakes resistant design & Construction of Buildings.

5 .IS:13920-1993 Code of Practice for Ductile detailing of concrete structures subjected to seismic forces and

6. National Building code of India - 2005.

It is further certified that the above structure will be constructed from foundation to roof, as per structural designs and detailing of reinforcements furnished in our drawings. The building will be safe and Sound as per the design.

R. GANESAN M.E., (Structures)
Structural Consultant
GSTRUDS
Structural Engineering
Consultancy Centre
No: 64, Nandavanam Street,
Indira Nagar, L.I.C. Colony,
Trichy-620 021. Ph: 0431-4024691
Email: ganesan_struct@rediffmail.com
LPA REG. No: SE/Gr/TLPA/MAY2019/029

DESIGN BASIS REPORT
For

The proposed construction of Residential Apartment Building at Plot No: 4 & 5, T.S.No: 87 & 88(OLD S.F.No.: 176/1Pt.,) Block No: 9, ward - I, Arul Nagar,Pandamangalam Village, K.Abishekapuram Zone, Trichy City Corporation.

TABLE OF CONTENTS

1.0 OBJECTIVE

2.0 DESIGN OF LOADS

2.1 Dead Loads

2.2 Imposed Loads

2.3 Earthquake Loads

2.4 Load Combinations

3.0 ANALYSIS METHOD

4.0 **DESIGN ASSUMPTION**

5.0 FOUNDATION DESIGN

6.0 MATERIALS

7.0 NOMINAL COVER TO REINFORCEMENT

1.0 OBJECTIVE

The Proposed Construction of Residential Apartment Building at Plot No: 4 & 5, T.S.No.: 87 & 88 (OLD S.F.No: 176/1Pt.,) Block No: 9, ward - I, Arul Nagar, Pandamangalam Village, K.Abishekapuram Zone, Trichy City Corporation

The Building is designed for Stilt + 5 floors. The structure is supported on column in turn resting on column footing Foundation. The Structural System comprises columns, beams, slabs and wall structure.

3-D Analysis of all the building structures will be carried out using STAAD PRO Software package and analysis results shall be used for designing the various elements.

2.0 DESIGN LOADS

2.1 Dead Loads

The Dead loads that are envisaged to act permanently are considered as per **IS:875 (Part 1) – 1987 – Dead loads,** Indian standard **" Code of Practice for Design Loads (other than earthquakes) for Buildings and Structures".**

1. Slab is assumed to be 125mm thick - 3.125KN/m^2
2. Floor finish – 1.25KN/m^2
3. AAC Block masonry walls 230mm & 100mm thick are proposed to be used (location of walls per Architectural drawings) Unit weight is taken as 8 KN/m^3
4. Weathering course in Terrace finish –3 KN/m^2

2.2 Imposed Loads

The imposed loads that are envisaged to get permanently are considered as per **IS : 875 (part – 2) – 1987.** Indian standard **"Code of Practice for Design loads (other than earthquake) for Buildings and structures".**

1. Living = 2 KN/m^2
2. Staircase = 4 KN/m^2
3. Toilets = 2 KN/m^2
4. Terrace floors = 1.5 KN/m^2

2.3 Earthquake Load

T he loading due to earthquake is assessed based on the provisions of **IS :1893-2016.** Structures with ductile detailing is considered as per **IS: 13920-2016.**

Madurai falls under Seismic Zone II

Zone factor **= 0.10**

Response reduction factor **= 5**

Importance factor **= 1.0**

Structure with ductile detailing is considered as per IS: 13920-2016

2.3 Load combinations

The various loads shall be combined in accordance with the stipulations in IS:875 (Part 5) – 1987. Whichever combinations produced the most unfavorable effect in the building, foundation or structural member concerned shall be adopted. The various load combinations considered in the analysis are as follows:

1. 1(DL + LL)
2. 1(DL + 0.8LL + 0.8 SQX + 1
3. 1(DL + 0.8LL + 0.8 SQX - 1
4. 1(DL + 0.8LL + 0.8 SQZ + 1
5. 1(DL + 0.8LL + 0.8 SQZ - 1
6. 1.0(DL + SQX + 1)
7. 1.0(DL + SQX - 1)
8. 1.0(DL + SQZ + 1)
9. 1.0(DL + SQZ - 1)
10. 1.5(DL + LL)
11. 1.5(DL + SQX + 1)
12. 1.5(DL + SQX - 1)
13. 1.5(DL + SQZ + 1)
14. 1.5(DL + SQZ – 1)
15. 1.2(DL + LL + SQX + 1)

PTO

16. 1.2(DL + LL + SQX – 1)
17. 1.2(DL + LL + SQZ + 1)
18. 1.2(DL + LL + SQZ – 1)
19. 0.9DL + 1.5SQX + 1
20. 0.9DL + 1.5SQX – 1
21. 0.9DL + 1.5SQZ + 1
22. 0.9DL + 1.5SQZ - 1

The above load combination will be considered and effect of worst combinations will be taken for design of various building elements.

3.0 ANALYSIS METHODS

The analysis of the structures is carried out using the STAAD PRO. The entire super structure is modeled using frame elements as appropriate. Beams and columns are modeled as frame elements. Appropriate loads and its combinations as per relevant IS code clauses, for most unfavorable effects are chosen for design. Various load cases considered in the analysis are briefed above.

4.0 DESIGN ASSUMPTION

4.1.1 The Base of the Foundation is assumed to be FIXED & PINNED.

4.1.2 All concrete elements shall be designed in accordance with IS 456:2000 Limit state design.

4.1.3 Appropriate loads and its combination as per relevant clauses, for the most unfavorable effects are chosen for design. (Refer Load Combination below).

5.0 FOUNDATION DESIGN

Type of foundation : Pile foundation
Depth of foundation : 17m below natural ground level

6.0 MATERIALS

The self-weight of the various elements are computed based on the unit weight of materials as given below:

S. no	Materials	Unit weight KN / m^3
1	Reinforced Cement Concrete	30/ 25
2	AAC Block / Brick WORK	8/20
3	Steel	78.50

Structural concrete shall be of M30 for pile & M 25 for all other R.C.C structural members .

Steel reinforcement shall be of grade Fe 500 confirming to IS : 1786-2008.

P.T.O

7.0 NOMINAL COVER TO REINFORCEMENT

From Durability requirement, exposure condition is assumed as mild for structural elements above ground level and moderate for structural elements below ground level.

The clear cover to reinforcement to meet durability requirement shall be as follows:

Column - 40mm

Beam - 32mm

Slab - 20mm

R. GANESAN M.E., (Structures)
Structural Consultant
GSTRUDS
Structural Engineering
Consultancy Centre
No: 64, Nandavanam Street,
Indira Nagar, L.I.C. Colony,
Trichy-620 021. Ph: 0431-4024691
Email: ganesan_struct@rediffmail.com
LPA REG. No: SE/Gr/TLPA/MAY2019/029

GEOMATRIX CONSULTANCY
Geo-Tech. Consultants & Engineers

CALCULATION -1

LOAD CARRYING CAPACITY OF PILES

(As per IS : 2911 (Part I / Sec 2) - 2010) APPENDIX B

Name of Project : **Sub Soil Investigation for the proposed** RESIDENTIAL APARTMENT BUILDING **at Pandamangalam Village in Trichy District.**

Borehole No. : 1
Dia of Pile : 0.60 m
Coefficient (K) : 0.30
Factor of safety : 2.5
RL of bottom of pile cap : -RL 1.000 m

Depth of Soil layers from Bed Level

Description	Depths	Levels
1st Layer	8.00 m	-RL 9.000 m
2nd Layer	2.00 m	-RL 11.000 m
3rd Layer	2.00 m	-RL 13.000 m
4th Layer	2.00 m	-RL 15.000 m
5th Layer	2.00 m	-RL 17.000 m

1st Layer

Ultimate Side Resistance or Skin Friction

Type of Soil = **Sand mixed with Clay**
Dia of Pile = **0.60 m**
Thickness of the Layer = **8.000 m**
Angle of Internal friction (ø) = **26.46°**
Average cohesion , C = **5.90 t/Sq.m**
Unit weight of Soil = **1.910 t/Sq.m**
Effective unit weight of Soil g = **0.910 t/Cu.m**
Coefficient of earth pressure (k) = **0.30**
Reduction Factor a = **0.5**
Surface Area (As) = 15.080 Sq.m
Average Overburden Pressure (P_{di}) = (Depth of layer/2) x Effective Unit Weight of soil
= 4 x 0.91
Average Overburden Pressure (P_{di}) = **3.640 t/Sq.m**
Skin Friction (Rf) = $KP_{di} \tan \Ø A_{si} + (a \times C \times A_{si})$
= (0.3 x 3.64 x tan 26.46 x 15.08) + (0.5 x 5.9 x 15.08)
Rf = **52.68 t**

2nd Layer

Ultimate Side Resistance or Skin Friction

Type of Soil = **Clay**
Dia of Pile = **0.60 m**
Thickness of the Layer = **2.000 m**
Angle of Internal friction (ø) = **0.00°**
Average cohesion , C = **7.62 t/Sq.m**
Unit weight of Soil = **1.940 t/Cu.m**
Effective unit weight of Soil g = **0.940 t/Cu.m**
Coefficient of earth pressure (k) = **0.30**
Reduction Factor a = **0.5**
Surface Area (As) = 3.770 Sq.m
Average Overburden Pressure (P_{di}) = **8.220 t/Sq.m**
Skin Friction (Rf) = $KP_{di} \tan \Ø A_{si} + (a \times C \times A_{si})$
= (0.3 x 8.22 x tan 0 x 3.77) + (0.5 x 7.62 x 3.77)
Rf = **14.36 t**

PTO

3rd Layer

Ultimate Side Resistance or Skin Friction

Type of Soil	=	**Sand**
Dia of Pile	=	**0.60 m**
Thickness of the Layer	=	**2.000 m**
Angle of Internal friction (ø)	=	**27.4°**
Average cohesion , C	=	**0.00 t/Sq.m**
Unit weight of Soil	=	**1.960 t/Cu.m**
Effective unit weight of Soil g	=	**0.960 t/Cu.m**
Coefficient of earth pressure (k)	=	**0.30**
Reduction Factor a	=	**0.4**
Surface Area (As)	=	3.770 Sq.m
Average Overburden Pressure (P_{di})	=	**10.120 t/Sq.m**
Skin Friction (Rf)	=	$KP_{di} \tan Ø A_{si} + (a \times C \times A_{si})$
	=	(0.3 x 10.12 x tan 27.36 x 3.77) + (0.4 x 0 x 3.77)
Rf	=	**5.92 t**

4th Layer

Ultimate Side Resistance or Skin Friction

Type of Soil	=	**Clay mixed with Gravel**
Dia of Pile	=	**0.60 m**
Thickness of the Layer	=	**2.000 m**
Angle of Internal friction (ø)	=	**29.4°**
Average cohesion , C	=	**6.95 t/Sq.m**
Unit weight of Soil	=	**1.930 t/Cu.m**
Effective unit weight of Soil g	=	**0.930 t/Cu.m**
Coefficient of earth pressure (k)	=	**0.30**
Reduction Factor a	=	**0.4**
Surface Area (As)	=	3.770 Sq.m
Average Overburden Pressure (P_{di})	=	**12.010 t/Sq.m**
Skin Friction (Rf)	=	$KP_{di} \tan Ø A_{si} + (a \times C \times A_{si})$
	=	(0.3 x 12.01 x tan 29.4 x 3.77) + (0.4 x 6.95 x 3.77)
Rf	=	**18.13 t**

5th Layer

Ultimate Side Resistance or Skin Friction

Type of Soil	=	**Soft Disintegrated Rock**
Dia of Pile	=	**0.60 m**
Thickness of the Layer	=	**2.000 m**
Angle of Internal friction (ø)	=	**31.1°**
Average cohesion , C	=	**0.00 t/Sq.m**
Unit weight of Soil	=	**1.869 t/Cu.m**
Effective unit weight of Soil g	=	**0.869 t/Cu.m**
Coefficient of earth pressure (k)	=	**0.30**
Reduction Factor a	=	**0.4**
Surface Area (As)	=	3.770 Sq.m
Average Overburden Pressure (P_{di})	=	**13.809 t/Sq.m**
Skin Friction (Rf)	=	$KP_{di} \tan Ø A_{si} + (a \times C \times A_{si})$
	=	(0.3 x 13.81 x tan 31.12 x 3.77) + (0.4 x 0 x 3.77)
Rf	=	**9.43 t**

Total Skin Friction	=	100.53 t 1005 kN

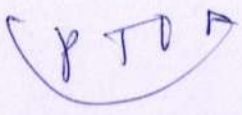

End Bearing Resistance			
Type of Soil	=	**Soft Disintegrated Rock**	
Dia of Pile	=	**0.60 m**	
Angle of Internal friction (ø)	=	**31.1°**	
Average cohesion at pile tip (Cp)	=	**0.00 t/Sq.m**	
Effective unit weight of Soil g	=	**0.869 t/Cu.m**	
Area of Cross section(Ap)	=	0.283 Sq.m	
Average Overburden Pressure (P_d)	=	**14.678 t/Sq.m**	
N_y	=	27.53	**(From IS 6403:1981 for ø = 31.12°)**
N_q	=	21.38	**(From IS 6403:1981 for ø = 31.12°)**
N_c	=	33.34	**(From IS 6403:1981 for ø = 31.12°)**
End Bearing Resistance (Ru)	=	$Ap *((1/2 D. g .N_y) + (P_d.N_q) + (N_c.Cp))$	
	=	0.283 x((1/2 x 0.6 x 0.869 x 27.53 +(14.678 x 21.38) + 0.283 x 33.34 x 0	
Ru	=	**90.76 t**	**908 kN**
QU	=	100.529 + 90.759	
Total Ultimate Pile carrying Capacity =		**191.29 t**	**1913 kN**
Allowable Pile Capacity	=	191.288 / 2.5	**76.52 t**
Capacity of pile, KN	=	750.61 KN	

FINAL RESULT :

1	Ultimate compression Capacity	=	1913 kN
2	Ultimate Uplift Capacity	=	1118.3 kN
3	Factor of Safety for Compression Capacity	=	2.5
4	Factor of Safety for Uplift Capacity(Pullout test will conducted)	=	3
5	**Safe compression Capacity in** KN	=	**750.61 KN**
6	**Safe Uplift Capacity in** KN	=	**372.78 KN**

R. GANESAN M.E., (Structures)
Structural Consultant
GSTRUDS
Structural Engineering
Consultancy Centre
No: 64, Nandavanam Street,
Indira Nagar, L.I.C. Colony,
Trichy-620 021. Ph: 0431-4024691
Email: ganesan_struct@rediffmail.com
LPA REG. No: SE/Gr/TLPA/MAY2019/029

GEOMATRIX CONSULTANCY
No.22, P.T.Rajan road 3rd street (Thomas street),
Narimedu, Madurai - 625 002.

CALCULATION-2

Name of Project : **Sub Soil Investigation for the proposed** RESIDENTIAL APARTMENT BUILDING **at Pandamangalam Village in Trichy District.**

CALCULATION FOR LATERAL LOAD CAPACITY AND MAXIMUM MOMENT ON PILES

DATA :

BH NO	=	**1**		
Dia of Pile	=	**600**	mm	
Grade of Concrete (fck) M25	=	**25**	N/mm²	
Area of Pile (A)	=	**0.28**	m²	
Moment of Interia (I)	=	**0.0063585**	m⁴	
Young Modulus (E)	=	5000 X √fck	N/mm²	
	=	30000	N/mm²	
Top of Pilecap lvl	=	**0.00**	m	
Bottom of Pilecap lvl	=	**1.00**	m	
Pile Termination Depth	=	**17.0**	m	
Length of Pile	=	**16.00**	m	
Minimum load on Pile / Capacity of Pile (Qu)	=	**1912.90**	KN	
Cantilever length above ground / bed to the point of load application (e)	=	**1.00**	m	

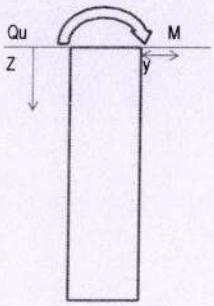

STEP-1

Modulus of subgrade Reaction for granular Soil, ηh in KN/m³

No of Blows (N)	=	**100.00**	Nos	
Soil Type as per Soil Report	=	**Soft Disintegrated Rock**		
Refer IS 2911 (Part 1/Sec 2):2010,Annex C - Table 3				
The value of ηh in KN/m³	=	**12.00**	KN/m³	
Refer IS 2911 (Part 1/Sec 2):2010 Annex C-2.3.1				
Stiffness Factor (T)	=	(EI/ηh)^(1/5)		
T	=	1.74	m	
L1/T	=	0.57		
Refer IS 2911 (Part 1/Sec 2):2010 Fig : 4				
Fixed Head Piles Lf/T	=	2.14		

Where Lf = Equivalent length of Cantilever Pile

STEP-2

Behaviour of Pile based on its Embedded Length

Refer IS 2911 (Part 1/Sec 2):2010,Annex C - Table 5

Short (rigid) Pile	L	≤	2T	
	L	≤	3.48	m
Long (elastic) Pile	L	≥	4T	
	L	≥	6.96	m
	Lf/T	=	2.14	
	Lf or Zf	=	3.72	m
	Length of Pile (L)	=	Bottom of pile cap - Bottom of Pile	
	L	=	16.00	m
	16.00	>	6.96	Embedded length of pile is greater than 4T

The Pile is to be designed as Long (elastic) Pile

P 80

STEP-3

Determination of Lateral Load in Long (elastic) Pile

Maximum Deflection on pile is	=	12	mm
Allowable deflection	=	3	mm

Refer IS 2911 (Part 1/Sec 2):2010 Annex C -4.2

Deflection, y	=	$\{ H (e+Zf)^3 /12 EI \} \times 10^3$	for Fixed head Piles
Where,			
H	=	Lateral Load in KN	
y	=	Deflection of Pile head in mm	
E	=	Young Modulus of Pile material in KN/m^2	
Zf	=	Depth of point of fixity in m	
I	=	Moment of Inertia of the pile CS	
e	=	Cantilever length above ground/ bed to the point of load application in m	
Deflection, y	=	$\{ H (e+Zf)^3 /12 EI \} \times 10^3$	
3	=	0.045937655 H	
	=	65.31 KN	
Lateral Load (H)	=	**65**	**KN**

STEP-4

Determination of Moment in Long (elastic) Pile

Refer IS 2911 (Part 1/Sec 2):2010 Annex C -4.3

Fixed end Moment	=	$(H(e + Zf))/2$	For Fixed head Piles
Mf	=	120.9	KNm

Refer IS 2911 (Part 1/Sec 2):2010 Annex C -4.3

The actual maximum Moment (M)	=	m x Mf	

Refer IS 2911 (Part 1/Sec 2):2010 Fig : 5A

Reduction factor (m)	=	0.85	
M	=	102.77	KNm

RESULT

Lateral Load (H)	=	**65**	**KN**
Maximum Moment on piles (M)	=	**102.77**	**KNm**

R. GANESAN M.E., (Structures)
Structural Consultant
GSTRUDS
Structural Engineering
Consultancy Centre
No: 64, Nandavanam Street,
Indira Nagar, L.I.C. Colony,
Trichy-620 021. Ph: 0431-4024691
Email: ganesan_struct@rediffmail.com
LPA REG. No: SE/Gr/TLPA/MAY2019/029

Four Pile - Pile Cap

Design datas

Size of coulmn =	0 m	X	0 m	or
Factored load from column =			3200 kN	
Actual load from column =			2133.333 kN	
Load on each column =			533.3333 kN	
Diameter of pile =			0.6 m	or
Pile capacity =			700 kN	
			O.K	
Diameter of rod along x =			32 mm	
Diameter of rod along y =			32 mm	
Clear cover =			50 mm	
Compressive strength of concrete =			30 N/mm²	
Yield strength of steel =			500 N/mm²	
Pile resting on (Hard or Soft)			Hard	strata

1. Number of piles required

No. of piles required =	3.048
No. of piles provided =	4

2. Dimensions of pile cap

C/c distance between piles required =	1.2 m
C/c distance between piles provided =	1.53 m
Edge distance =	0.15 m

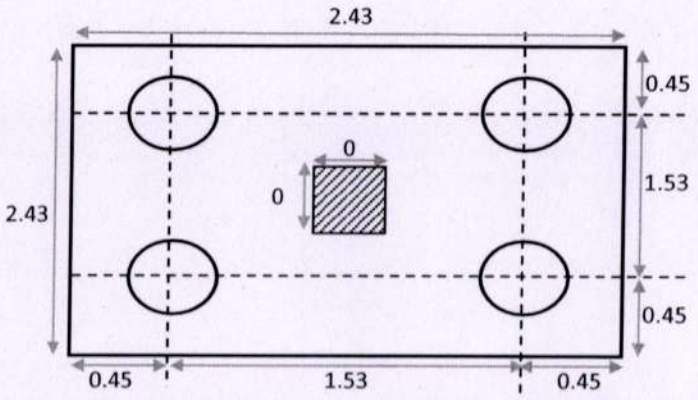

Length of pile cap =	2.43 m
Breadth of pile cap =	2.43 m

3. Depth of pile cap using moment

Load acting on single pile = 533.3333

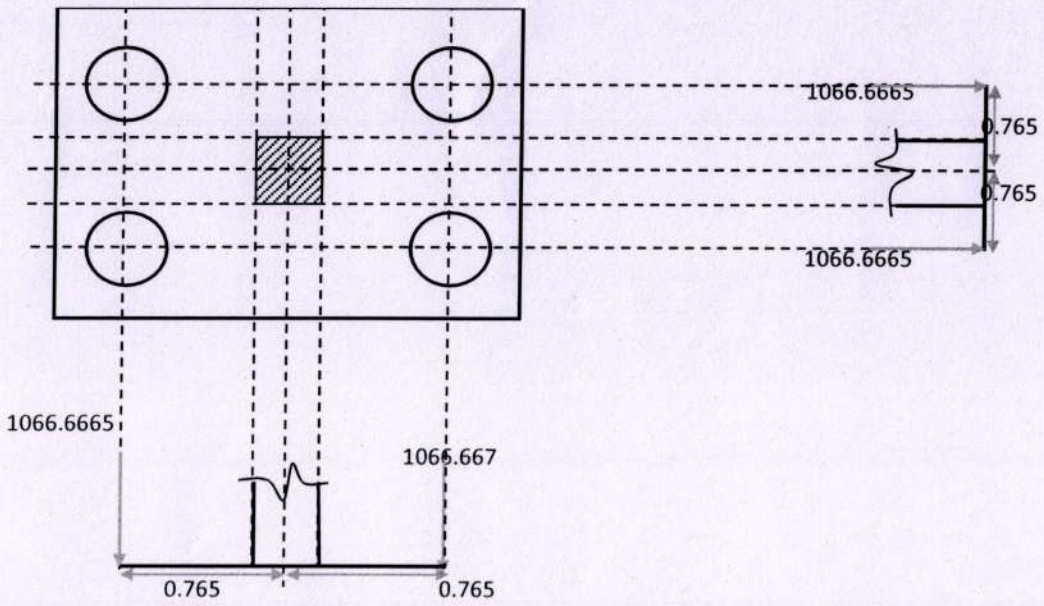

Ultimate moment along x =	From left,	815.9999	kNm
Ultimate moment along y =	From top,	815.9999	kNm
Ultimate moment along x =	From right,	815.9999	kNm
Ultimate moment along y =	From bottom,	815.9999	kNm
Ultimate moment taken =		1224	kNm
Effective depth of pile cap required =		543.739	mm
Overall depth of pile cap required =		609.739	mm

4. Depth of pile cap using punching shear

Equation of punching shear	$4\ d^2 +$	$0\ d +$	-2336949	
Effective depth of pile cap required =		764.354	mm	
Overall depth of pile cap required =		830.354	mm	

5. Depth of pile cap provided

Overall depth of pile cap required =	830.354	mm
Overall depth of pile cap provided =	800	mm
Effective depth provided along x =	734	mm
Effective depth provided along y =	702	mm

6. Reinforcement calculation

Minimum area of steel in tension required along x =	880.8	mm^2	
Mu/bd_x^2 =	2.272	N/mm^2	
Pt =	0.587	%	
Area of steel in tension required along x =	4308.58	mm^2	
Area of steel in tension along x =	4308.58	mm^2	
Spacing required in x-direction =	186.662	mm	
Spacing provided in x-direction =	175	mm	
Area of steel in tension provided along x =	4595.701	mm^2	O.K

Minimum area of steel in tension required along y =	842.4 mm²	
Mu/bd_y^2 =	2.484 N/mm²	
Pt =	0.645 %	
Area of steel in tension required along y =	4527.9 mm²	
Area of steel in tension along y =	4527.9 mm²	
Spacing required in y-direction =	177.62 mm	
Spacing provided in y-direction =	175 mm	
Area of steel in tension provided along y =	4595.701 mm²	O.K

Design details

Diameter of piles =	0.6 m	
Number of piles provided =	4	
Size of pile cap =	2.43 m X 2.43 m	
Depth of pile cap	0.8 m	
For reinforcement along x provide	32 mm dia bar at	175 mm c/c spacing
For reinforcement along y provide	32 mm dia bar at	175 mm c/c spacing

R. GANESAN M.E., (Structures)
Structural Consultant
GSTRUDS
Structural Engineering
Consultancy Centre
No: 64, Nandavanam Street,
Indira Nagar, L.I.C. Colony,
Trichy-620 021. Ph: 0431-4024691
Email: ganesan_struct@rediffmail.com
LPA REG. No: SE/Gr/TLPA/MAY2019/029

Design of column with Biaxial Moment

Column No = C02

1 Design Forces From STAAD — Load Case = C10

1. Axial Load on column	=	792	KN
2. Bending moment along x-x, Mux	=	334	KN.m
3. Bending moment along y-y, Muy	=	3	KN.m

2 Design Datas

1. Compressive strength of Concrete, Fck	=	25	N/mm^2
2. Yield Strength of steel, Fy	=	500	N/mm^2
3.Diameter of Longitudinal Reinforcement,	=	25	mm
4.Diameter of lateral Reinforcement,	=	8	mm
5. Clear cover to the reinforcement, C	=	32	mm
6. Type of column	=	Rectangular	
7. Size of Column	=	b x d	
	=	450 x 450	mm
8. Unsupported Length of Column along x-x, L_x	=	3.96	m
9. Unsupported Length of Column along y-y, Ly	=	3.96	m
10. Effective length factor,	=	1	
11. Effective Length of Column, along x-x, L_x	=	3.96	m
12. Effective Length of Column, along y-y, Ly	=	3.96	m

2 Check for leff/D

Effective length,lex/Lateral dimensions = L_{ex} / D
= 8.8
= 8.8< 12
= Short Column

As per clause 25.1.2.2, IS:456:2000

Effective length,ley/Lateral dimensions = L_{ex} / b
= 8.8
= 8.8< 12
= Short Column

3 Section Geometry

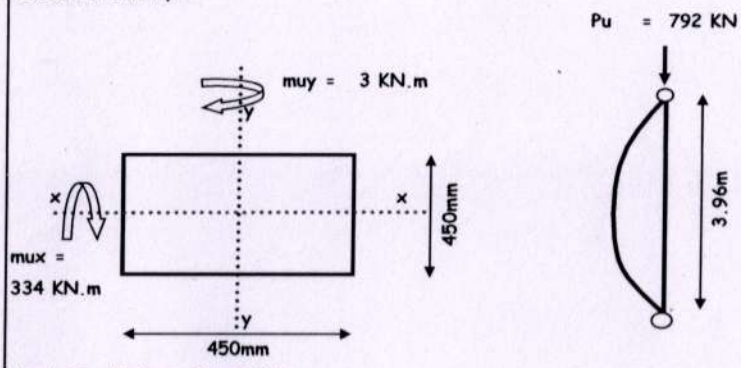

4 Check for Minimum Eccentricity

As per Clause 25.4, IS:456:2000

Applied eccentricties

ex = Mux/Pu
= 334/792
= 421.72 mm

ey = Muy/Pu
= 3/792
= 3.7879 mm

PTO

Minimum eccenticity

e_{xx} = (lex/500)+(D/30)
= (3960/500) + (450/30)
= 22.92 mm or 20 mm
= 22.92 mm

e_{yy} = (ley/500)+(D/30)
= (3960/500) + (450/30)
= 22.92 mm or 20 mm
= 22.92 mm

5 Moment due to Eccentricity

m_{uex} = Pu x e_{xx}
= (792x22.92)/1000
= 18.15 KN.m

m_{uey} = Pu x e_{yy}
= (792x22.92)/1000
= 18.15 KN.m

6 Design Moment

mux = Mux or muex
= **334** KN.m

muy = Mux or muey
= **18.15** KN.m

7 Calculation of Longitudinal reinforcement

Assume percentage of reinforcement = 2.89 %
Asc, required = 2.89/100x 450x450
= 5852.25 mm^2
No of bars = 12 Nos
Asc, Provided = 5888 mm^2
pt, provided = 2.908 %

Moment Capacity Along x Direction

(Pu/fck b D) = (792000/25 x 450 x 450)
= 0.16
p/fck = 2.908/25
= 0.12

d'/D = 32/450
= 0.07

PTO

From interaction chart, SP16

$Mux1/fck\ b\ D^2$ = 0.19

Mux1 = 0.19 x 450x450x450x25

= 432.84 KN.m

Moment Capacity Along y Direction

(Pu/fck b D) = (792000/25 x 450 x 450)

= 0.16

p/fck = 2.908/25

= 0.1163

b'/D = 32/450

= 0.07

From interaction chart, SP16

$Muy1/fck\ b\ D^2$ = 0.19

Muy1 = 0.19 x 450x450x450x25

= 432.84 KN.m

8 Check for Moment Capcity

$(Mux/Mux1)^{an} + (Muy/Muy1)^{an} < 1$

Puz = (0.45 fck.Ac) +(0.75 fy -0.45fck)Asc

Ac = 202500 mm^2

Puz = 4419.885 KN

Pu/Puz = 0.179

an = 0.965

For Pu/Puz =0.2 to 0.8
an varies from 1.0 to 2.0

$(Mux/Mux1)^{an} + (Muy/Muy1)^{an}$ = 0.826

0.826< 1

O.K

9 Calculation of Lateral Reinforcement

Spacing of ties

1. Least Lateral Dimensions of column = 450 mm
2. Sixteen times the least dia of Longi bar = 400 mm
3. 300mm = 300 mm

Adopt Spacing = **300 mm**

10 Details

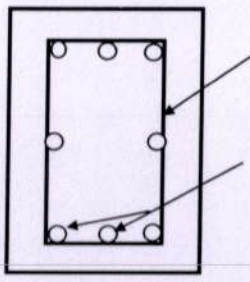

Y8@300mm c/c

No of bars = 8 Nos

R. GANESAN M.E., (Structures)
Structural Consultant
GSTRUDS
Structural Engineering
Consultancy Centre
No: 64, Nandavanam Street,
Indira Nagar, L.I.C. Colony,
Trichy-620 021. Ph: 0431-4024691
Email: ganesan_struct@rediffmail.com
LPA REG. No: SE/Gr/TLPA/MAY2019/029

Design of Beam SB04

Size of Beam	-230mm x 450mm
Concrete grade	- M25
Characteristic strength of reinforcement	- 500N/mm^2
Clear cover	- 32mm,
Effective depth = 450-32-20/2 = 408	- 408mm
Dia of rod used	- 20mm

From stadd out put result

Factored Shear force maximum	- 124 kN
Factored Sagging moment Mu_z	- 193 knm

Reinforcement is at bottom:

$$M_u/bd^2 \text{ (sagging)} = = \frac{193 \times 10^6}{230 \times (408)^2} = 5.04 \text{ N/mm}^2$$

Using design aids, for M25, Fe 500, Table 4,

$P_t = 1.397\%$

$P_C = 0.492\%$

$$A_t = \frac{1.397 X 230 X 408}{100} = 1310 \text{mm}^2$$

Provide 3Y25 = 1473 mm^2 > 1310 mm^2 at bottom

Hence Safe

Compression reinforcement at top

$P_t = 0.492\%$

$$A_t = \frac{0.492 x 230 x 408}{100} = 462 \text{ mm}^2$$

Provide

3Y16 = 603mm^2 > 462 mm^2

Hence Safe.

Design for Shear.

T_v Max = $\frac{Vu}{bd} = \frac{124x1000}{230x408}$ = 1.32N/mm^2

Ast provided, 1473 mm^2

$P_t = \frac{1473x100}{230x408}$ =1.57 %

Refer table, 61 of SP16, for M25 grade Concrete

T_c = 0.74 N/mm^2

So shear taken by stirrups ,

$\frac{(Tv-Tc)Xbd}{1000} = \frac{(1.32-0.74)x230x408}{1000}$ = 54.43KN

Shear force per CM depth of beam = 54.43/40.8 = 1.33 KN/cm depth of beam

Refer table No. 62,

Provide 2 legged Y8 @150mm C/C

Size of beam (200 x 450) mm

Bottom reinforcement (Bottom) – 3Y25

Top reinforcement (Top) – 3Y16

Stirrups – Y8 @ 150mm C/C

R. GANESAN M.E., (Structures)
Structural Consultant
GSTRUDS
Structural Engineering
Consultancy Centre
No: 64, Nandavanam Street,
Indira Nagar, L.I.C. Colony,
Trichy-620 021. Ph: 0431-4024691
Email: ganesan_struct@rediffmail.com
LPA REG. No: SE/Gr/TLPA/MAY2019/029

Design of slab

Four Edges Discontinuous		
Fck	25	N/mm^2
Fy	500	N/mm^2
Dia of bar (Lx Direction)	8	mm
Dia of bar (Ly Direction)	8	mm
Clear cover	15	mm
Clear span Lx	3253	mm
Clear span Ly	4637	mm
Width of Beam	200	mm
Slab tk	125	mm
Floor Finish	50	mm
Weathering Coarse	1	mm
LIVE LOAD	2	KN/m2
Length of slab (lx)	3359	mm
Length of slab (ly)	4739	mm
Dead Load	4.10	KN/m2
LIVE LOAD	2	KN/m2
FD D.L	6.1425	KN/m2
FD L.L	3	KN/m2
ly/lx	1.4255	IT IS TWO WAY SLAB

Bending Moment Coeffecient for Rectangular Panels Supported on Four Sides with Provision for Torsion at Corners (IS 456-2000 Table 26)

		short span		long span	
		(-ve Mx)	(+ve Mx	(-ve My)	(+ve My)
		0.1006	0.1006	0.0495	0.049523
support moment	Mx	10.38	KN.m		
	My	5.1085	KN.m		
span moment	Mx	10.38	KN.m		
	My	5.1085	KN.m		

Xu max/d	0.46	
Q	3.3402	
d rquired	55.746	The depth provide is suffcient
Effective depth shorter span	106	
Effective depth longer span	98	
Ast (+ ve Shorter span)	235.71	mm^2
Ast (+ ve Longerer span)	122.98	mm^2
Ast (- ve Shorter span)	235.71	mm^2
Ast (- ve Longerer span)	122.98	mm^2
Min Ast	150	mm^2

SPAN REINFORCEMENT

TO PROVIDE 8 mm DIA OF BAR @213 mm SPACING IN 3253 mm DIRECTION

TO PROVIDE 8 mm DIA OF BAR @294 mm SPACING IN 4637 mm DIRECTION

SUPPORT REINFORCEMENT

TO PROVIDE 8 mm DIA OF BAR @213 mm SPACING IN 3253 mm DIRECTION

TO PROVIDE 8 mm DIA OF BAR @294 mm SPACING IN 4637 mm DIRECTION

R. GANESAN M.E., (Structures)
Structural Consultant
GSTRUDS
Structural Engineering
Consultancy Centre
No: 64, Nandavanam Street,
Indira Nagar, L.I.C. Colony,
Trichy-620 021. Ph: 0431-4024691
Email: ganesan_struct@rediffmail.com
LPA REG. No: SE/Gr/TLPA/MAY2019/029

Column & Grid Layout.

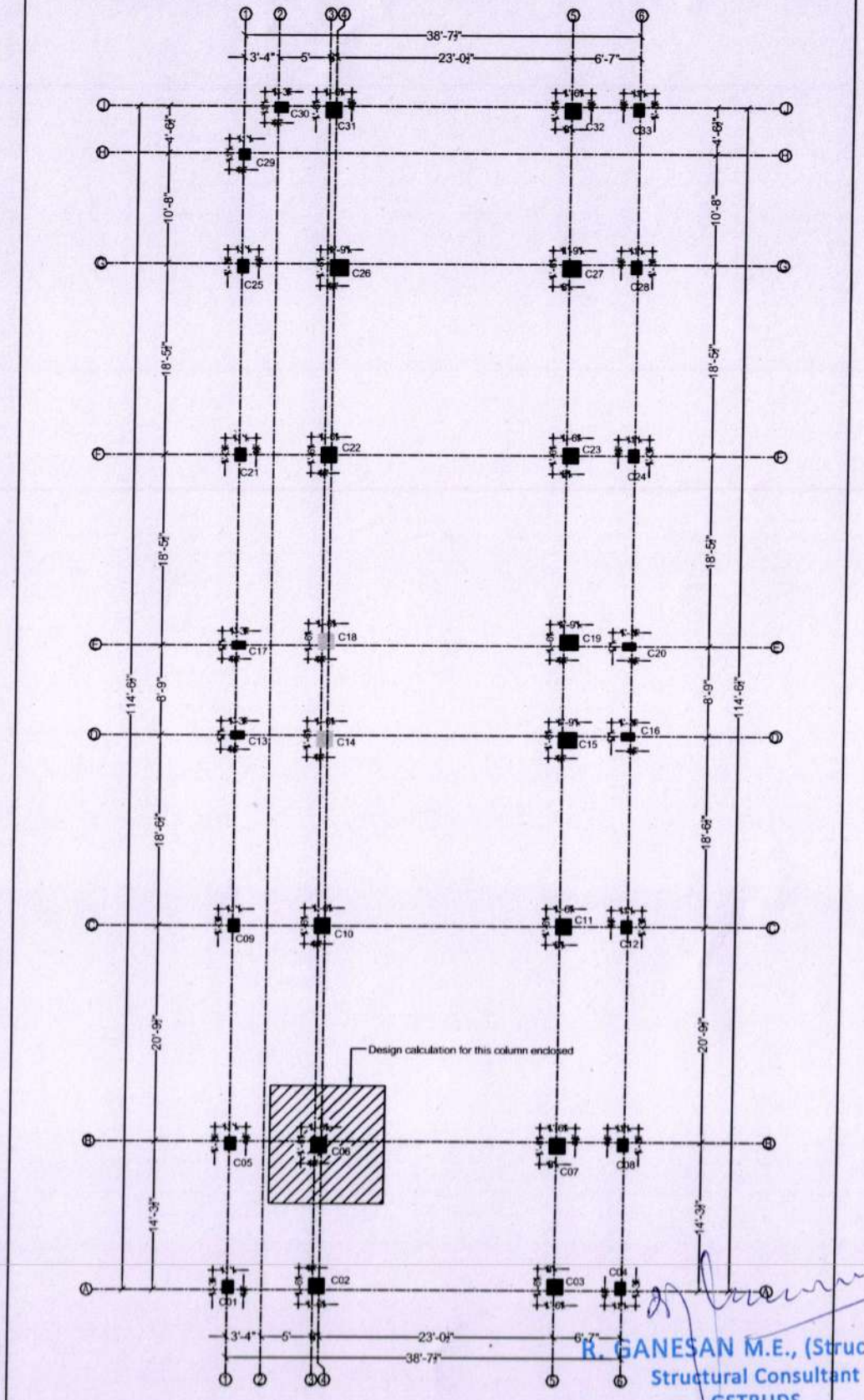

R. GANESAN M.E., (Structures)
Structural Consultant
GSTRUDS
Structural Engineering
Consultancy Centre
No: 64, Nandavanam Street,
Indira Nagar, L.I.C. Colony,
Trichy-620 021. Ph: 0431-4024691
Email: ganesan_struct@rediffmail.com
LPA REG. No: SE/Gr/TLPA/MAY2019/029

Column & Pile Layout.

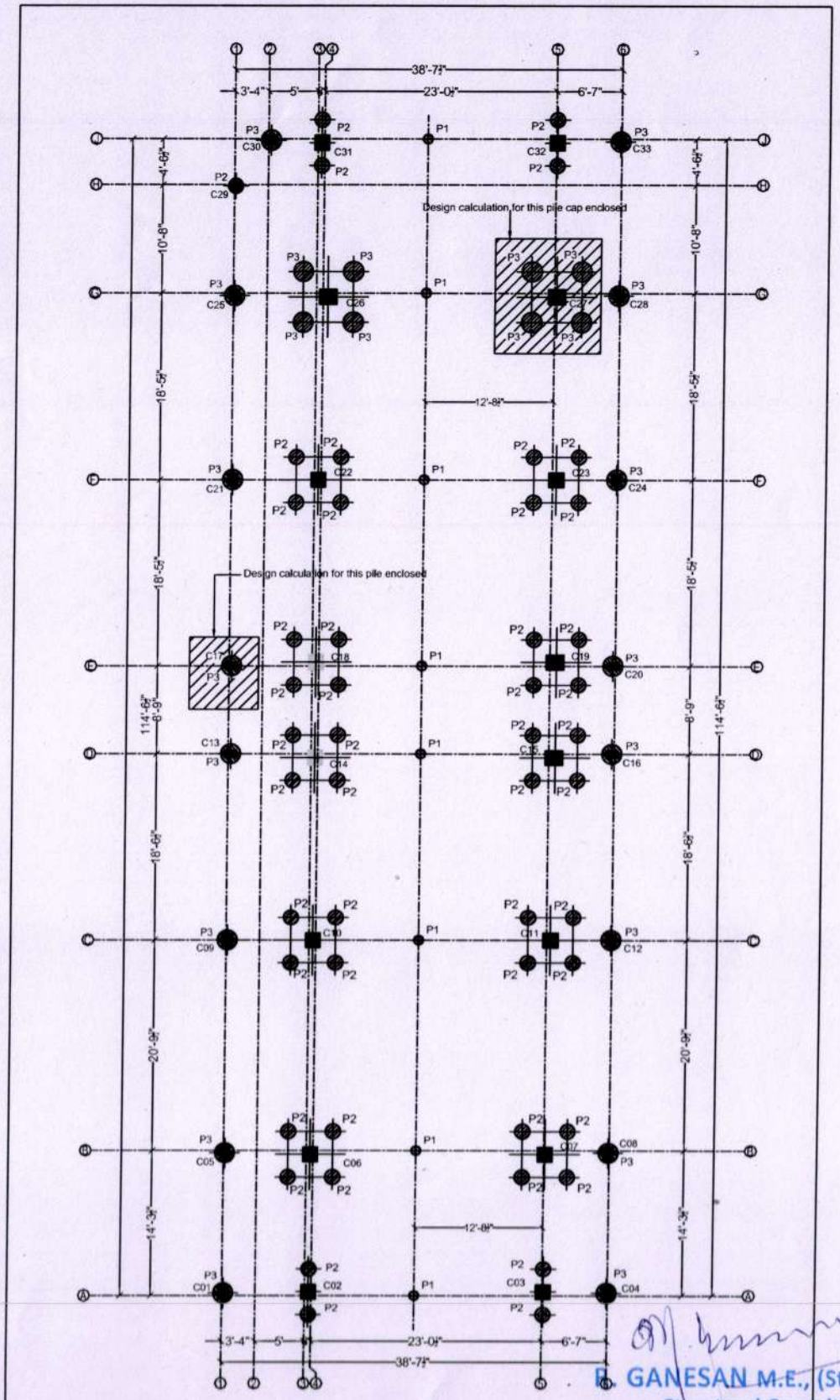

■ - Regular column	■ - Column to be Terminated @ Stilt Floor Roof
⊕ - Pile	Under reamed P1 - 12"Ø (300 mm)
	End Bearing Pile P2 - 18"Ø (450 mm) / End Bearing Pile P3 - 24"Ø (600 mm)

R. GANESAN M.E., (Structures)
Structural Consultant
GSTRUDS
Structural Engineering
Consultancy Centre
No: 64, Nandavanam Street,
Indira Nagar, L.I.C. Colony,
Trichy-620 021. Ph: 0431-4024691
Email: ganesan_struct@rediffmail.com
LPA REG. No: SE/Gr/TLPA/MAY2019/029

Pile Cap Layout.

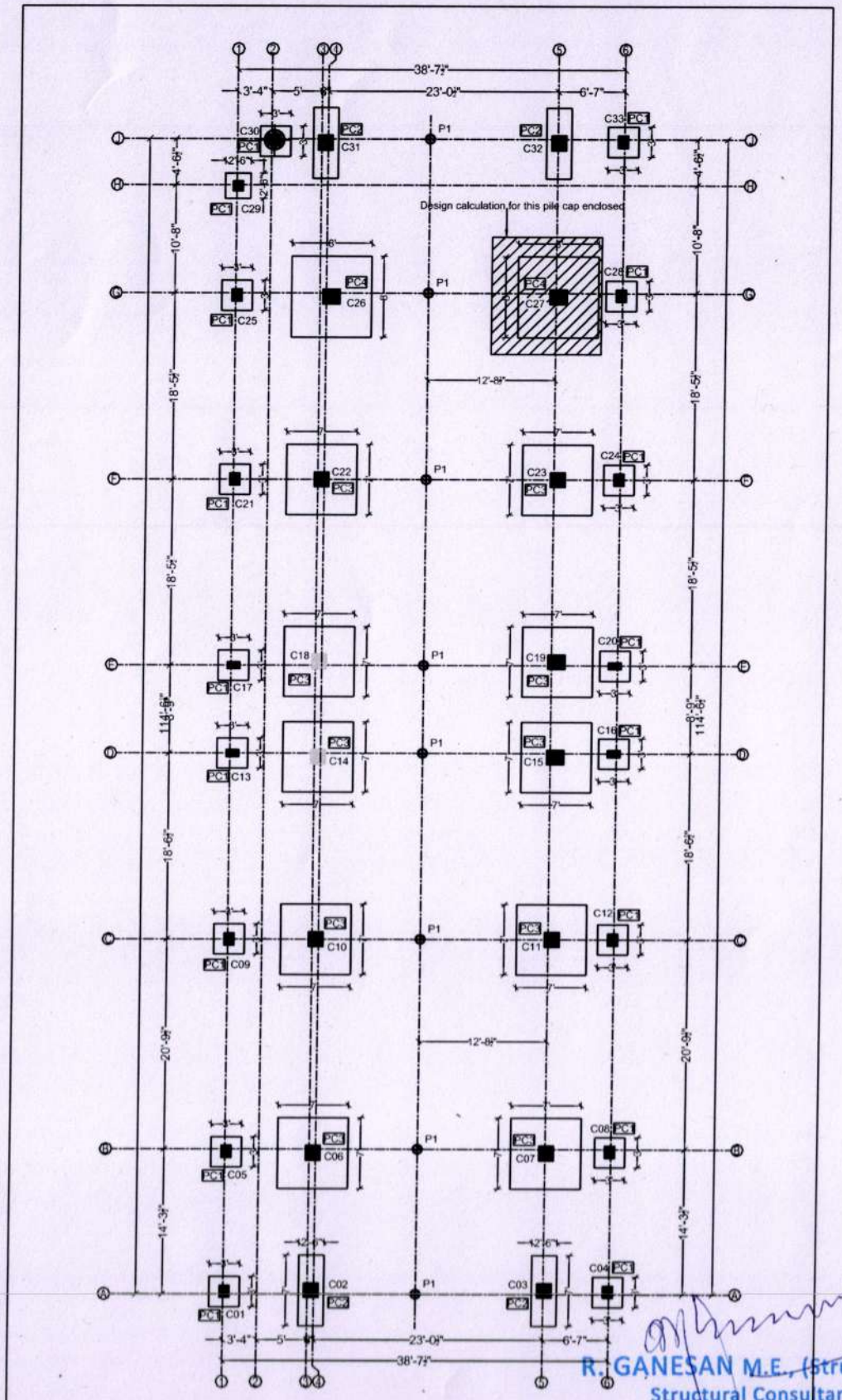

R. GANESAN M.E., (Structures)
Structural Consultant
GSTRUDS
Structural Engineering
Consultancy Centre
No: 64, Nandavanam Street,
Indira Nagar, L.I.C. Colony,
Trichy-620 021. Ph: 0431-4024691
Email: ganesan_struct@rediffmail.com
LPA REG. No: SE/Gr/TLPA/MAY2019/029

Stilt Floor Roof Beam Layout

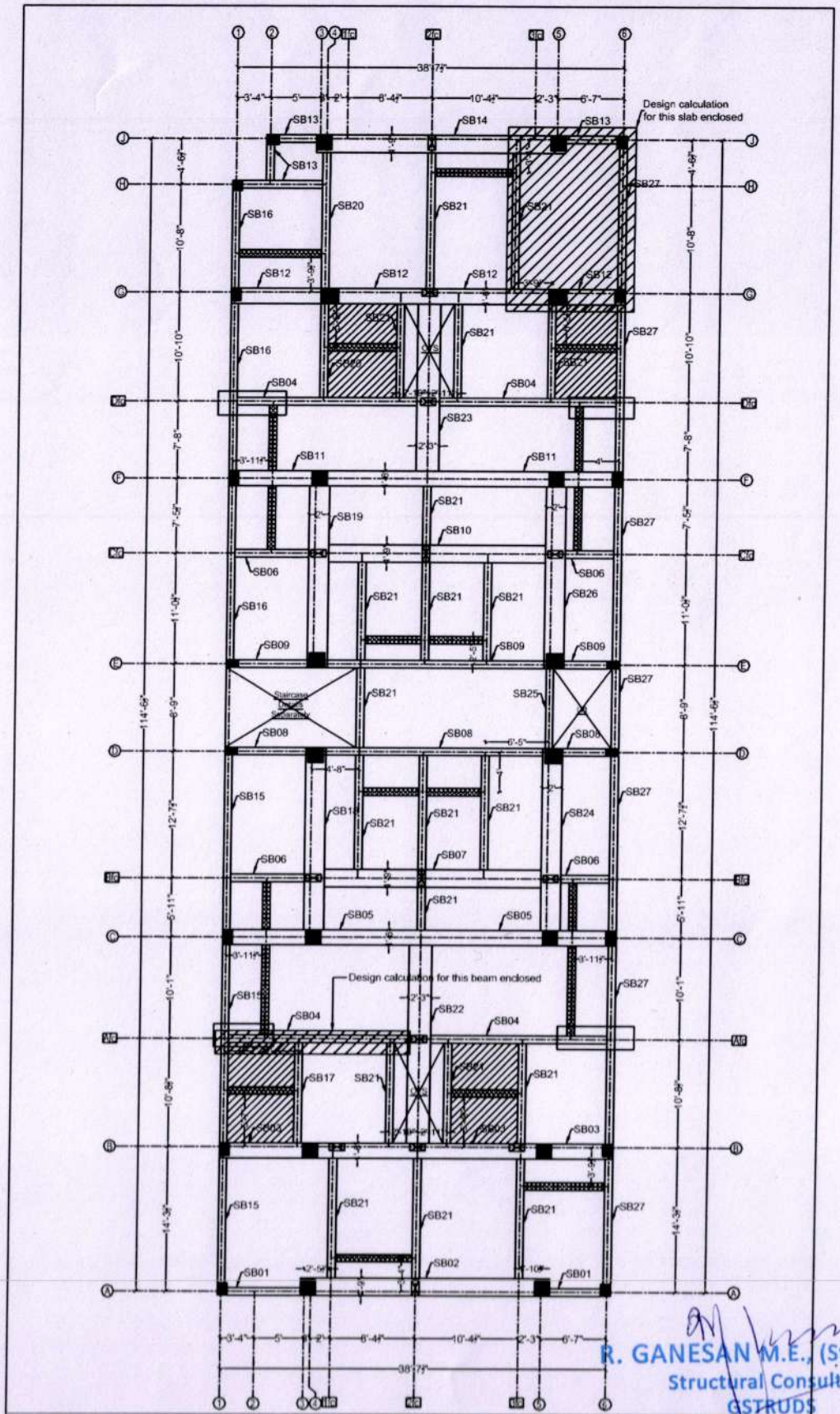

R. GANESAN M.E., (Structures)
Structural Consultant
GSTRUDS
Structural Engineering
Consultancy Centre
No: 64, Nandavanam Street,
Indira Nagar, L.I.C. Colony,
Trichy-620 021. Ph: 0431-4024691
Email: ganesan_struct@rediffmail.com
LPA REG. No: SE/Gr/TLPA/MAY2019/029

DIRECTORATE OF TOWN AND COUNTRY PLANNING

(Government of Tamil Nadu)
(807 Anna Salai, Chennai 600 002)

TIRUCHIRAPPALLI LOCAL PLANNING AUTHORITY

(Kajamalai Main road, Kajamalai, Tiruchy 620 023)

PROFESSIONAL REGISTRATION CERTIFICATE

This is to certify that Thiru **R.GANESAN** has enrolled as **STRUCTURAL ENGINEER GRADE-I** with this office who has the qualification of **M.E., in Structural Engineering** and experience in the relevant field for 29 years.

He has been given the Registration No.**SE/Gr.I/TLPA/May2019/029** on **08.05.2019**.

He shall be required to comply with the duties and responsibilities prescribed by the Government of Tamil Nadu in Part V, "Registration of Professionals", Tamil Nadu Combined Development and Building Rules 2019, approved vide G.O (Ms) No.18 MAWS (MA1) Department dated 4.2.2019.

This Registration is valid up to 07.05.2024



9/5/19.
Member Secretary,
Tiruchirappalli Local Planning Authority,
8.5.19 Tiruchirappalli

Self Attested

R. GANESAN M.E., (Structures)
Structural Consultant
GSTRUDS
Structural Engineering
Consultancy Centre
No: 64, Nandavanam Street,
Indira Nagar, L.I.C. Colony,
Trichy-620 021. Ph: 0431-4024691
Email: ganesan_struct@rediffmail.com
LPA REG. No: SE/Gr/TLPA/MAY2019/029